# BU4 Block Diagram

**PCB STACK UP**

- LAYER 1 : TOP
- LAYER 2 : GND1
- LAYER 3 : IN1
- LAYER 4 : VCC
- LAYER 5 : IN2
- LAYER 6 : IN3
- LAYER 7 : GND2
- LAYER 8 : BOT

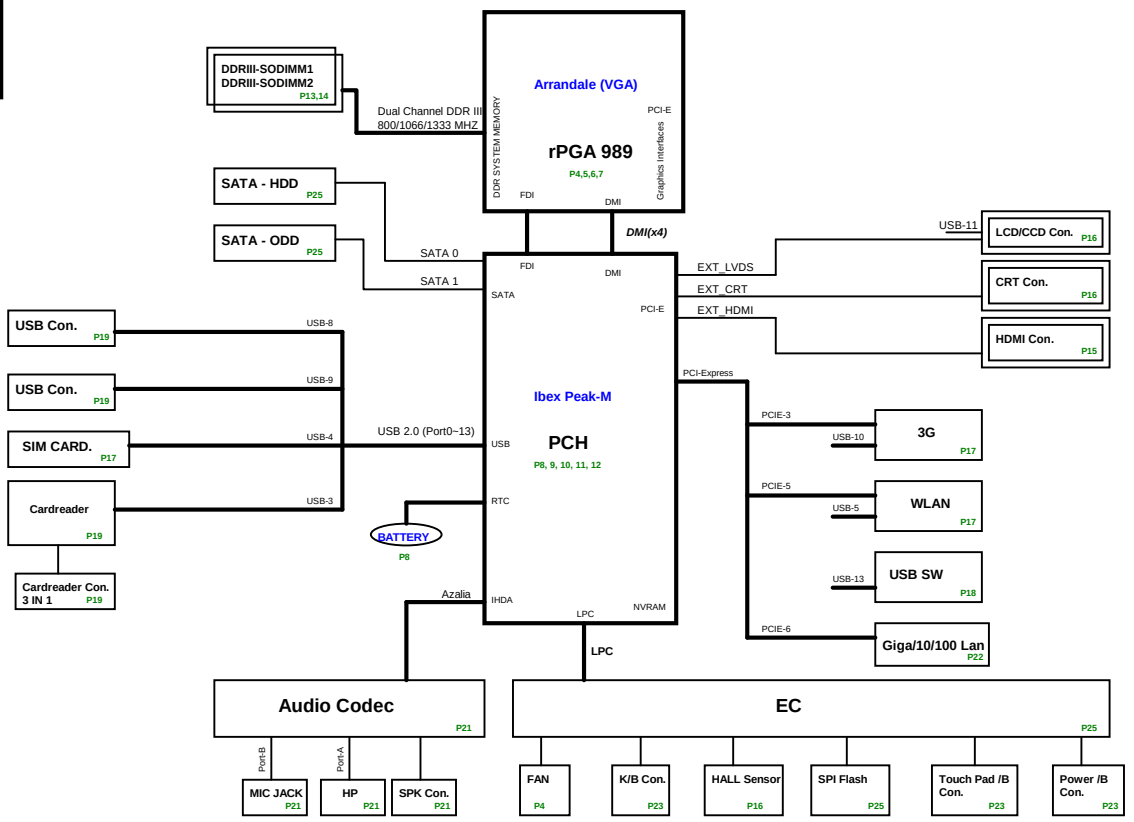


**CK505**
P3

**POWER SYSTEM**

| | |
|---|---|
| ISL88731A | P31 |
| RT8210B | P32 |
| RT8207LGQW | P33 |
| UP6111A | P34 |
| G966A | P35 |
| ISL62882C | P36 |
| ISL95870AHRUZ-T | P37 |

**+VCC_CORE**

**+1.5V**
**+1.5VSUS**

**+VTT**
**+1.05V**

**+1.8V**

+1.5V_S5
+3VPCU
+3V_S5
+3V
+5VPCU
+5V_S5
+5V
+SMDDR_VTERM
+SMDDR_VREF

**Quanta Computer Inc.**
PROJECT : BU4

| Size | Document Number | Rev |
|---|---|---|
| | Block Diagram | 1A |

Date: Wednesday, December 29, 2010 Sheet 1 of 32

## Table of Contents


| PAGE | DESCRIPTION | BOI-FUNCTIONS |
|---|---|---|
| 1 | Schematic Block Diagram | |
| 2 | Front Page | |
| 3-6 | Processor | CPU |
| 7-12 | PCH | CLG |
| 8 | RTC | RTC |
| 13-14 | DDRIII SO-DIMM | DDR |
| 17 | VGA Connector | VGA |
| 16 | LCD Panel | LDS |
| | CRT & CRT BUS SWITCH | CRT |
| | CCD | CCD |
| | HALL SENSOR&BACK LIGHT SWITCH | HSR |
| 19 | Display Port | DPP |
| 20 | HDMI comm part | HDM |
| | HDMI for GM | HMG |
| 21 | SATA ODD | ODD |
| | Main SATA HDD & 2nd SATA HDD | HDD |
| | G-Sensor | H3D |
| 22 | 5 IN 1 Card reader | MMC |
| | IEEE1394 | FIW |
| 23 | MINI Card (Wi-Fi & WIMAX) | WLN |
| | MINI Card 2nd | MNC |
| | MINI Card 3nd | MNC |
| | TMA Connector | TMA |
| | | |
| 24 | INT KeyBoard & K/B LED Power | KBC |
| | LED Board | LED |
| | TP&FP board | TPD,FPD |
| | Bluetooth Connector | BTM |
| | Felica Connector | FEC |
| | MMB Connector | MMB |
| | Power SW | PSW |
| | B-CAS Connector | BCS |
| | | |
| 25 | New Card (Express Card) | EXC |
| | E-SATA comb USB | ESA |
| | USB Connector | USB |
| | Audio & USB Board | USB,ADO |
| | Light Sensor | LSN |
| | Satellite LED | LED |
| | RF LED / WIMAX LED / Kill SW | KSW |
| 26 | EC WP8763LDG/WPC8769L(O) | KBC |
| | CIR | CIR |
| 27 | Codec (CX20583) | ADO |
| 28 | FM Tunner | FMM |
| | Modem Connector | MDM |
| | HOLE | |
| | | |
| 29 | Atheros LAN | LAN |
| 30 | NVRAM Connecyor | NVR |
| | | |
| 31 | Charger (ISL6251A) | PWM |
| 32 | System 5V/3V (ISL6237) | PWM |
| 33 | CPU CORE (ISL62882) | PWM |


| POWER PLANE | VOLTAGE | CONTROL SIGNAL | Power States ACTIVE IN |
|---|---|---|---|
| VIN | 10V~+19V | | S0~S5 |
| +VCCRTC | +3.0V~+3.3V | | S0~S5 |
| +3V | +3.3V | MAIN_ON | S0 |
| +3V_S5 | +3.3V | S5_ON | S0~S5 |
| +3V_HDP | +3.3V | MAIN_ON | S0 |
| +3VPCU | +3.3V | AC/DC Insert enable | S0 |
| +5V | +5V | MAIN_ON | S0 |
| +5V_S5 | +5V | S5_ON | S0~S5 |
| +5VPCU | +5V | AC/DC Insert enable | S0~S5 |
| +5V_TMA | +5V | MAIN_ON | S0 |
| WIMAX_P | +3.3V | WMAX_P for EC | |
| +1.8V | +1.8V | MAIN_ON | S0 |
| +1.5V | +1.5V | MAIN_ON | S0 |
| +1.5V_S5 | +1.5V | S5_ON | S0~S5 |
| +1.5V_SUS | +1.5V | SUSON | S0~S3 |
| +VCC_CORE | | VRON | S0 |
| +VTT | +1.05V~+1.1V | MAIN_ON | S0 |
| +1.05V | +1.05V | MAIN_ON | S0 |
| +VAXG | | GFXVR_EN | S0 |

| GND PLANE | PAGE |
|---|---|
| GND_SIGNAL | 32 |
| CARD_GND | 21 |
| AGND_DC/DC | 31 |
| GND | ALL |
| | |

| ITEM | Value Code | FUNCTIONS |
|---|---|---|
| 1 | EV@ | DISCRETE |
| 2 | IV@ | UMA |
| 3 | U3@ | USB 3.0 |
| 4 | U2@ | USB 2.0 (colay W USB 3.0) |
| 5 | HM@ | HDMI |
| 6 | IHM@ | Internal HDMI |
| 7 | EHM@ | External HDMI |
| 8 | 3G@ | 3G |
| 9 | C@ | Cost issue |
| 10 | MDC@ | Modem |
| 11 | S3@ | S3 Power Reduction |
| 12 | NS3@ | No S3 Power Reduction |
| 13 | KBP@ | K/B LED power |
| 14 | 51@ | 1G LAN |
| 15 | 52@ | 10/100 LAN |
| 16 | HDR@ | SATA HDD Re-drive IC |
| 17 | HDO@ | W/O SATA HDD Re-drive IC |

| PAGE | DESCRIPTION | BOI-FUNCTIONS |
|---|---|---|
| 34 | VAXG (ISL62881) | PWM |
| 35 | +VTT (UP6111A) | PWM |
| 36 | +1.05V (UP6111AQDD) | PWM |
| 37 | DDR 1.5V (TPS51116) | PWM |
| 38 | Discharge (1.5V_S5/1.8V) | PWM |
| 39 | Power Tree Table | |
| 40 | PCH Power Plane | |
| 41 | Power Management | |
| 42 | Change List | |

Quanta Computer Inc.

PROJECT : BU4

Size | Document Number: POWER STAGE AND BOI-FUNCTION | Rev 1A

Date: Wednesday, December 29, 2010 | Sheet 2 of 32

# CLOCK Gen

03

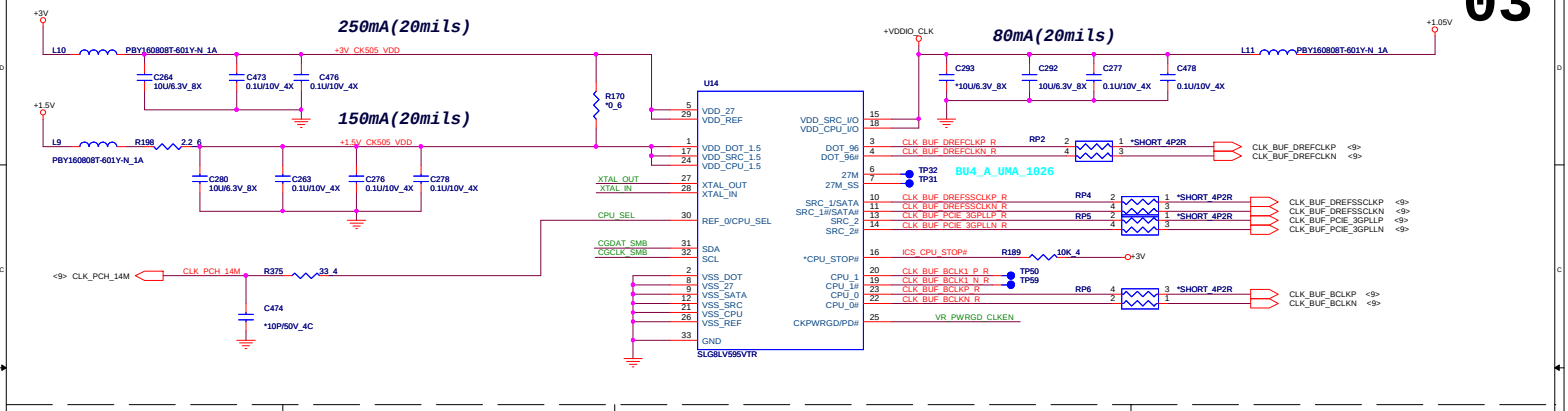


## CLK CRYSTAL

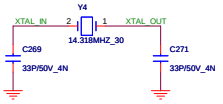


## CLK CPU_SEL

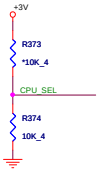


| | 0 | 1 |
|---|---|---|
| CPU_SEL | CPU =133MHz (default) | CPU=100MHz |

## CLK I2C

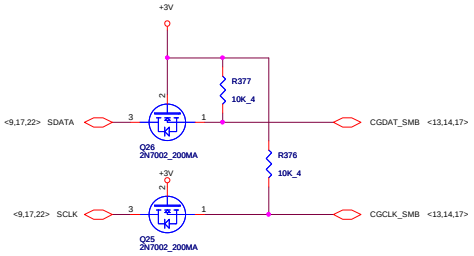


## CLK POWERGOOD

Change to +3VPCU
(follow CRB)

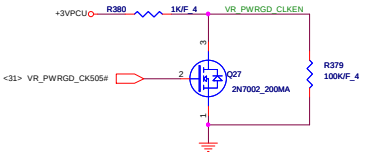


Quanta Computer Inc.

PROJECT : BU4

| Size | Document Number | Rev |
|---|---|---|
| | CLOCK GENERATOR | 1A |

Date: Wednesday, December 29, 2010 Sheet 3 of 32

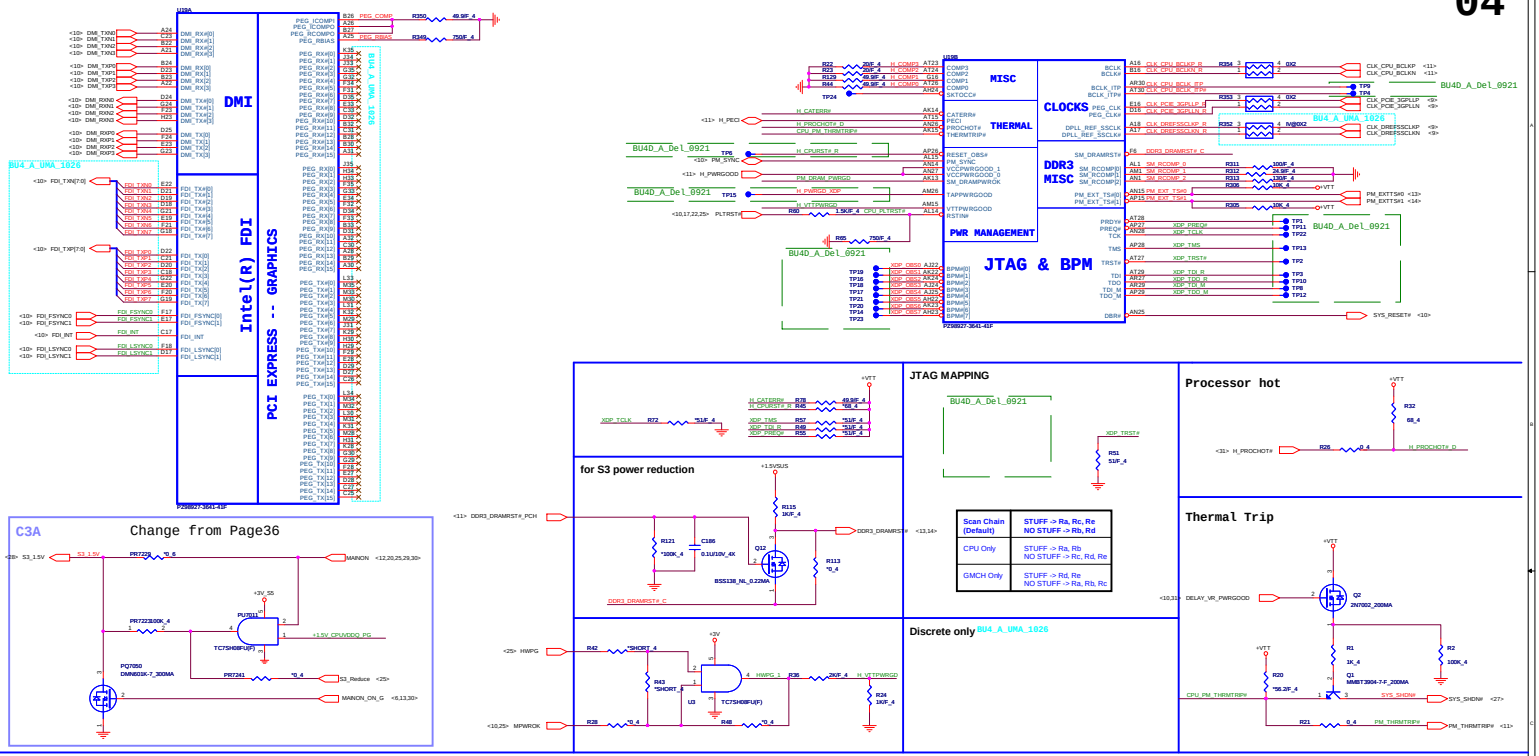


## JTAG MAPPING

| Scan Chain (Default) | STUFF -> Ra, Rc, Re<br>NO STUFF -> Rb, Rd |
|---|---|
| CPU Only | STUFF -> Ra, Rb<br>NO STUFF -> Rc, Rd, Re |
| GMCH Only | STUFF -> Rd, Re<br>NO STUFF -> Ra, Rb, Rc |

## Processor hot

## Thermal Trip

## for S3 power reduction

## Discrete only

## C3A Change from Page36

## CPU FAN CTRL

PM_DRAM_PWRGD:
Never drive hight before DDR3 voltage ramp to stable

## Local Temperature

#Shut down on 86 degree#

Quanta Computer Inc.
PROJECT : BU4
PROCESSER 1/4(HOST&PEX)
Size | Document Number | Rev 1A
Date: Wednesday, December 29, 2010 | Sheet 4 of 32

# AUBURNDALE/CLARKSFIELD PROCESSOR (DDR3)

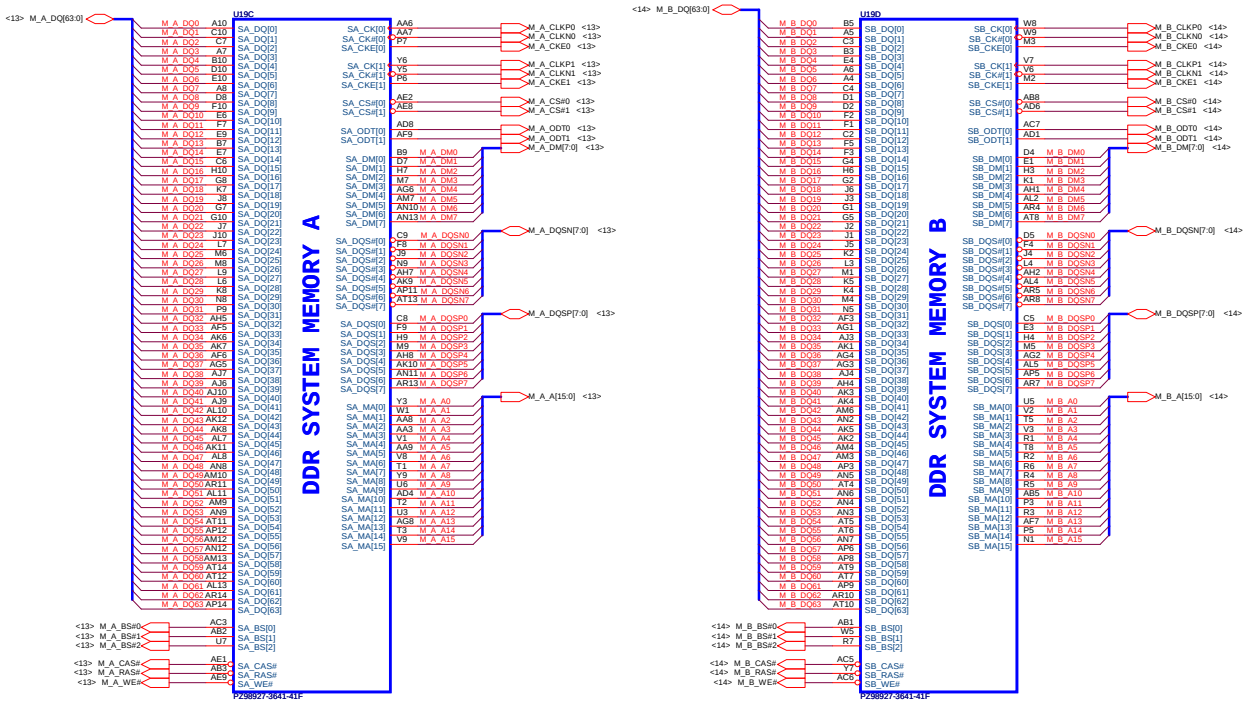


Quanta Computer Inc.

PROJECT : BU4

| Size | Document Number | Rev |
|---|---|---|
| | PROCESSER 2/4(DDR) | 1A |

Date: Wednesday, December 29, 2010 Sheet 5 of 32

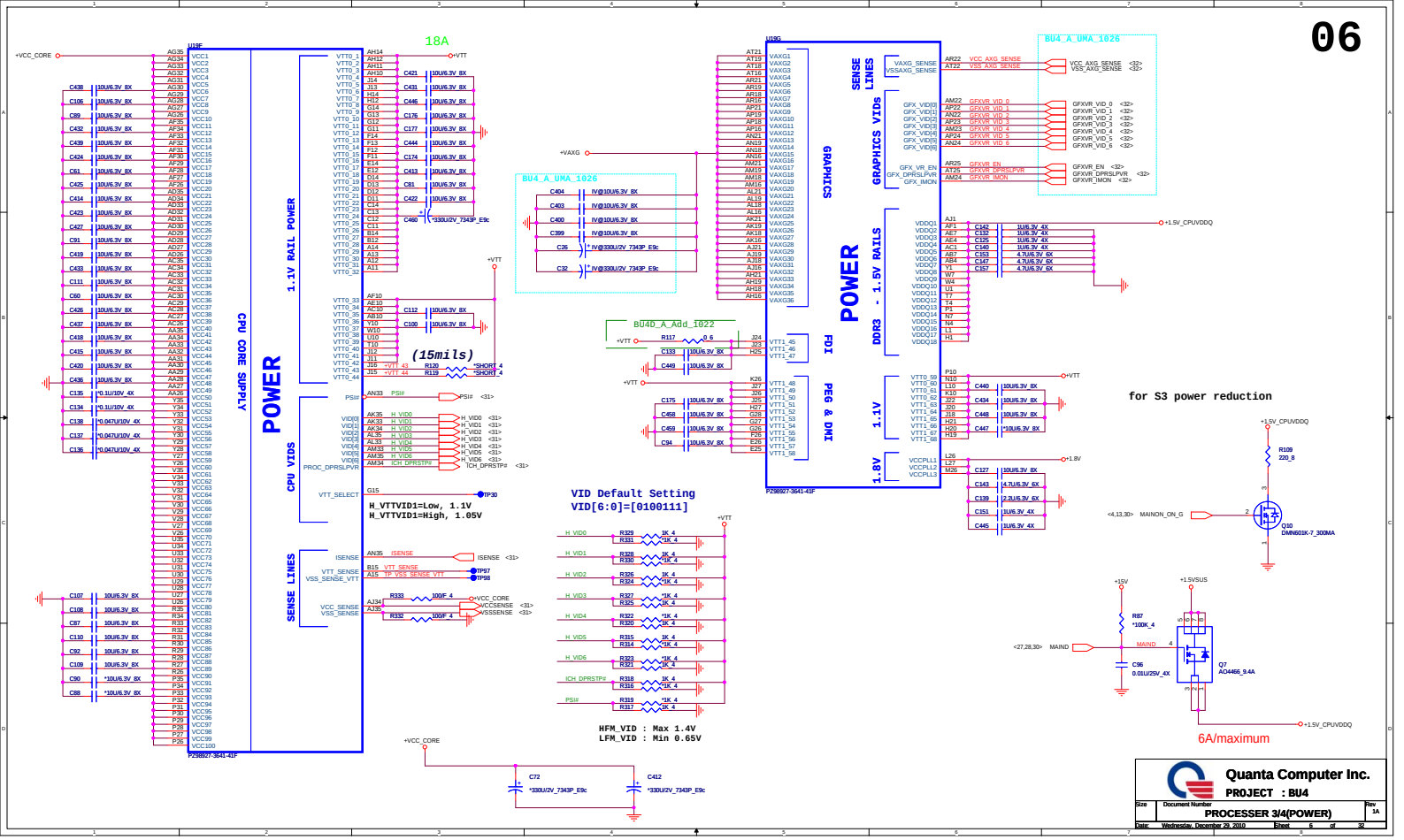


Quanta Computer Inc.

PROJECT : BU4

| Size | Document Number | Rev |
|---|---|---|
| | PROCESSER 3/4(POWER) | 1A |

Date: Wednesday, December 29, 2010 Sheet 6 of 32

# AUBURNDALE/CLARKSFIELD PROCESSOR (GND)

# AUBURNDALE/CLARKSFIELD PROCESSOR( RESERVED, CFG)



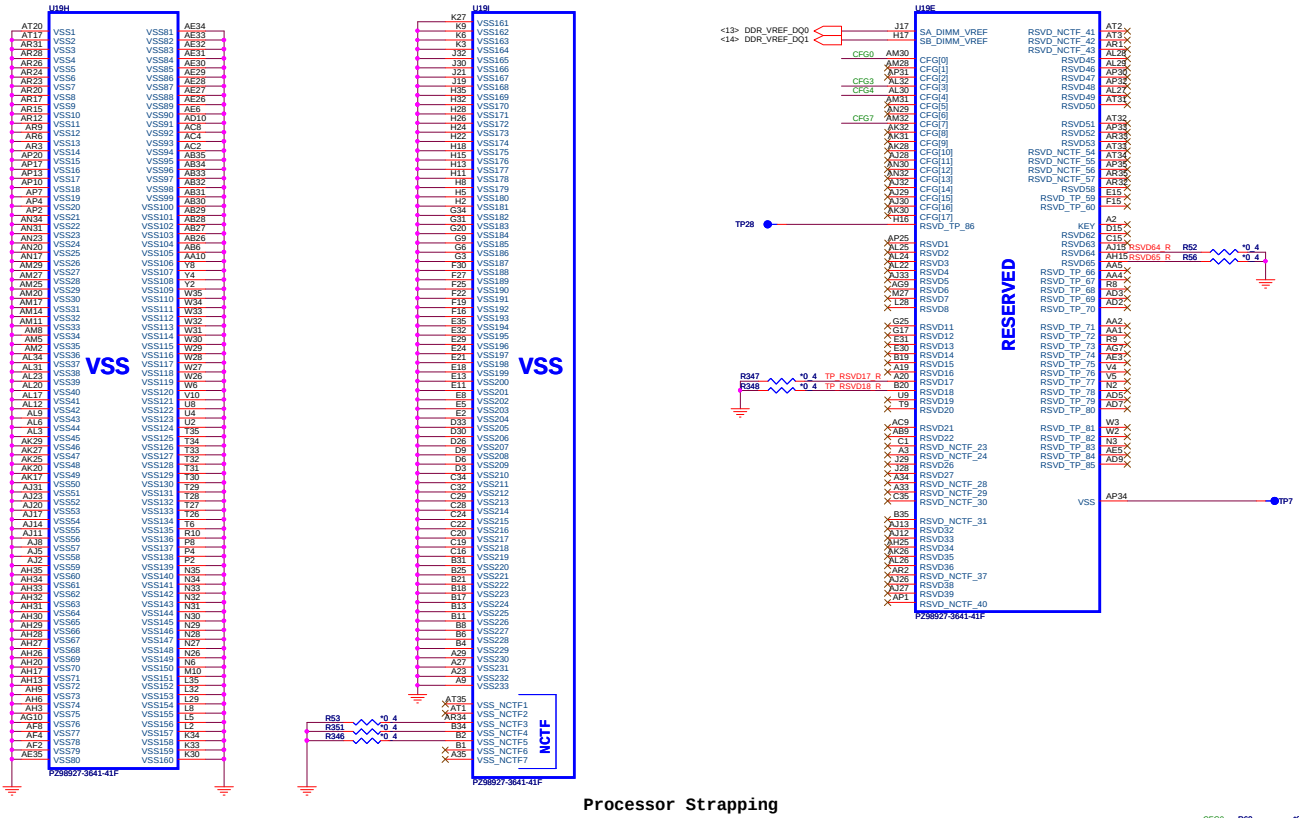


## Processor Strapping

| | 1 | 0 |
|---|---|---|
| CFG4 (Display Port Presence) | Disabled; No Physical Display Port attached to Embedded Diplay Port | Enabled; An external Display port device is connected to the Embedded Display port |
| CFG0 (PCI-Epress Configuration Select) | Single PEG | Bifurcation enabled |
| **CFG3 (PCI-Epress Static Lane Reversal)** | Normal Operation | **Lane Numbers Reversed 15 -> 0 , 14 -> 1** |

The Clarkfield processor's PCI Express interface may not meet PCI Express 2.0 jitter specifications. Intel recommends placing a 3.01K +/- 5% pull down resistor to VSS on CFG[7] for both rPGA and BGA components. This pull down resistor should be removed when this issue is fixed.

Quanta Computer Inc.

PROJECT : BU4

| Size | Document Number | Rev |
|---|---|---|
| | PROCESSER 4/4 (GND) | 1A |

Date: Wednesday, December 29, 2010 Sheet 7 of 32

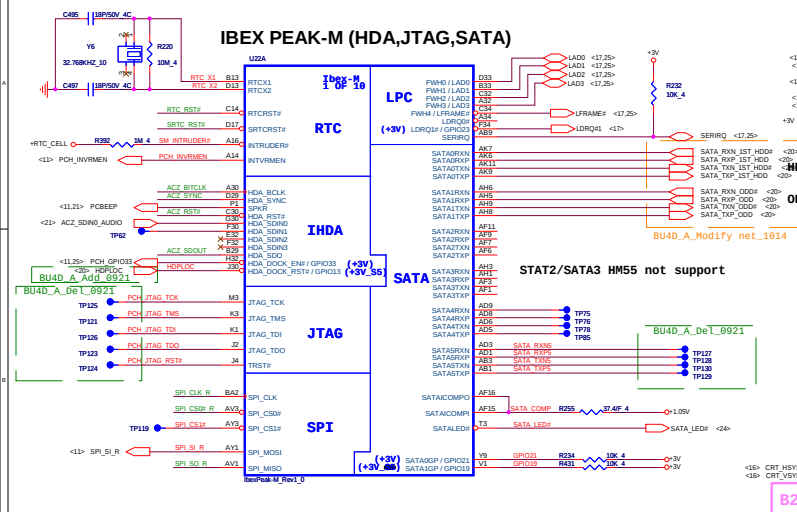


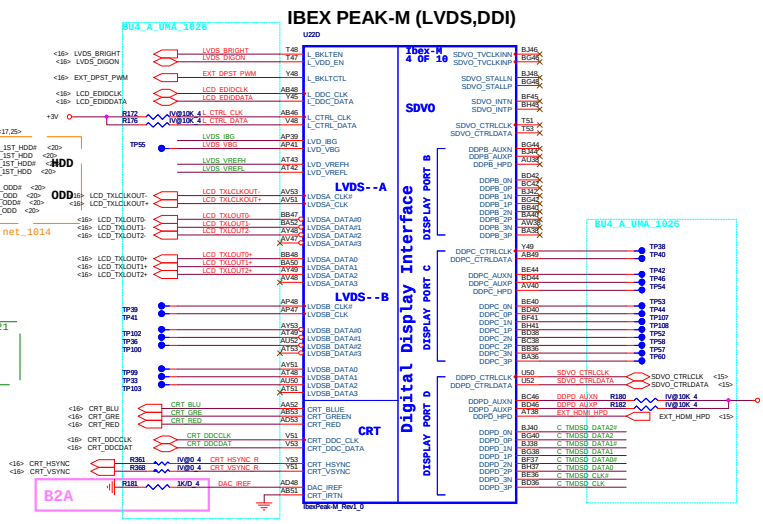


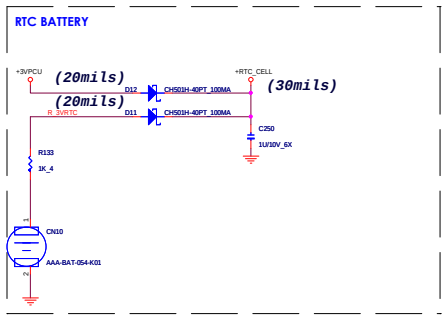


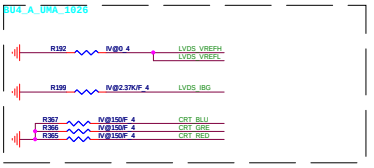


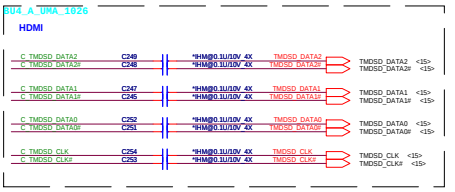


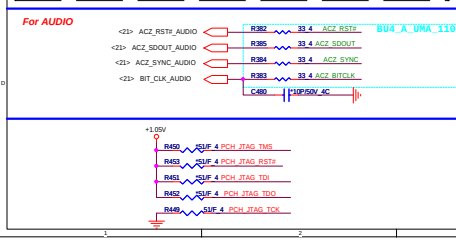


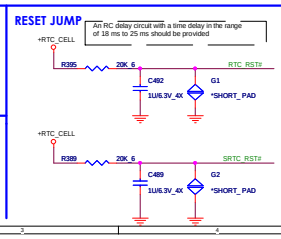


## 4M byte SPI ROM

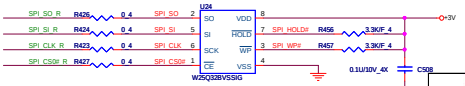


| PCH | 2MB | 4MB | 8MB |
|---|---|---|---|
| PM55 | ● | | |
| HM55 | | ● | |
| HM57/PM57 | | ● | ● |
| QM57/QS57 | | | ● |

Quanta Computer Inc.

PROJECT : BU4

| Size | Document Number | Rev |
|---|---|---|
| | PCH 1/5 (SATA,HDA,LPC) | 1A |

Date: Wednesday, December 29, 2010 Sheet 8 of 32

# IBEX PEAK-M (GND)

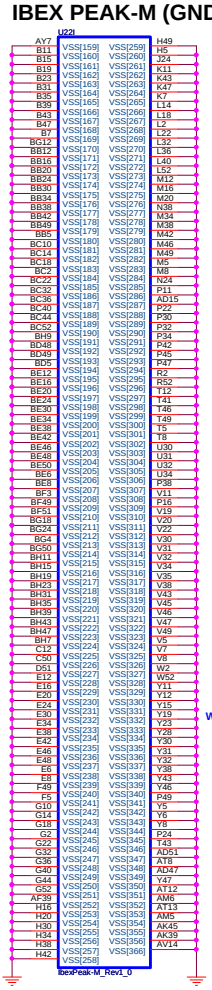


# 09

## IBEX PEAK-M (PCI-E,SMBUS,CLK)

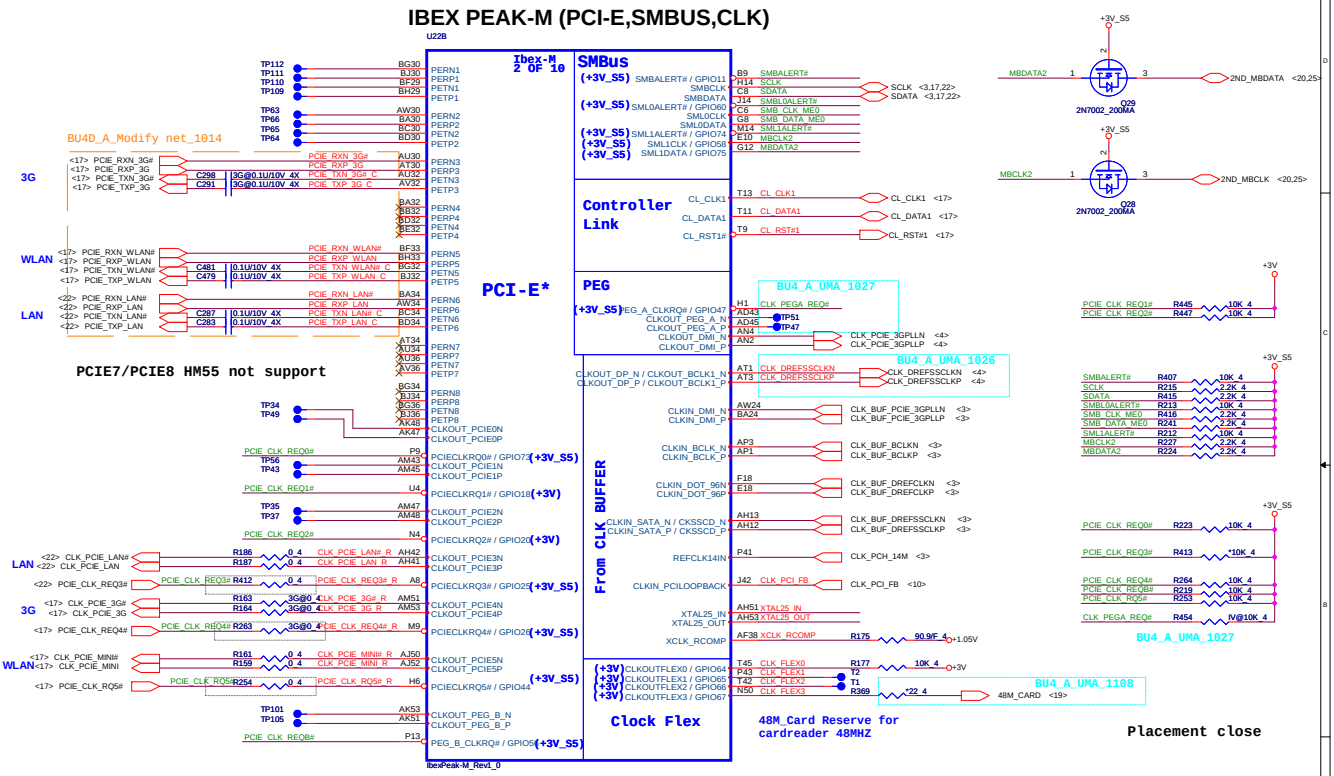


Quanta Computer Inc.

PROJECT : BU4

| Size | Document Number | Rev |
|---|---|---|
| | PCH 2/5 (PCIE, SMBUS, CK) | 1A |

Date: Wednesday, December 29, 2010 Sheet 9 of 32

# IBEX PEAK-M (PCI,USB,NVRAM)

# IBEX PEAK-M (DMI,FDI,GPIO)

BU4D_A_Del_1022

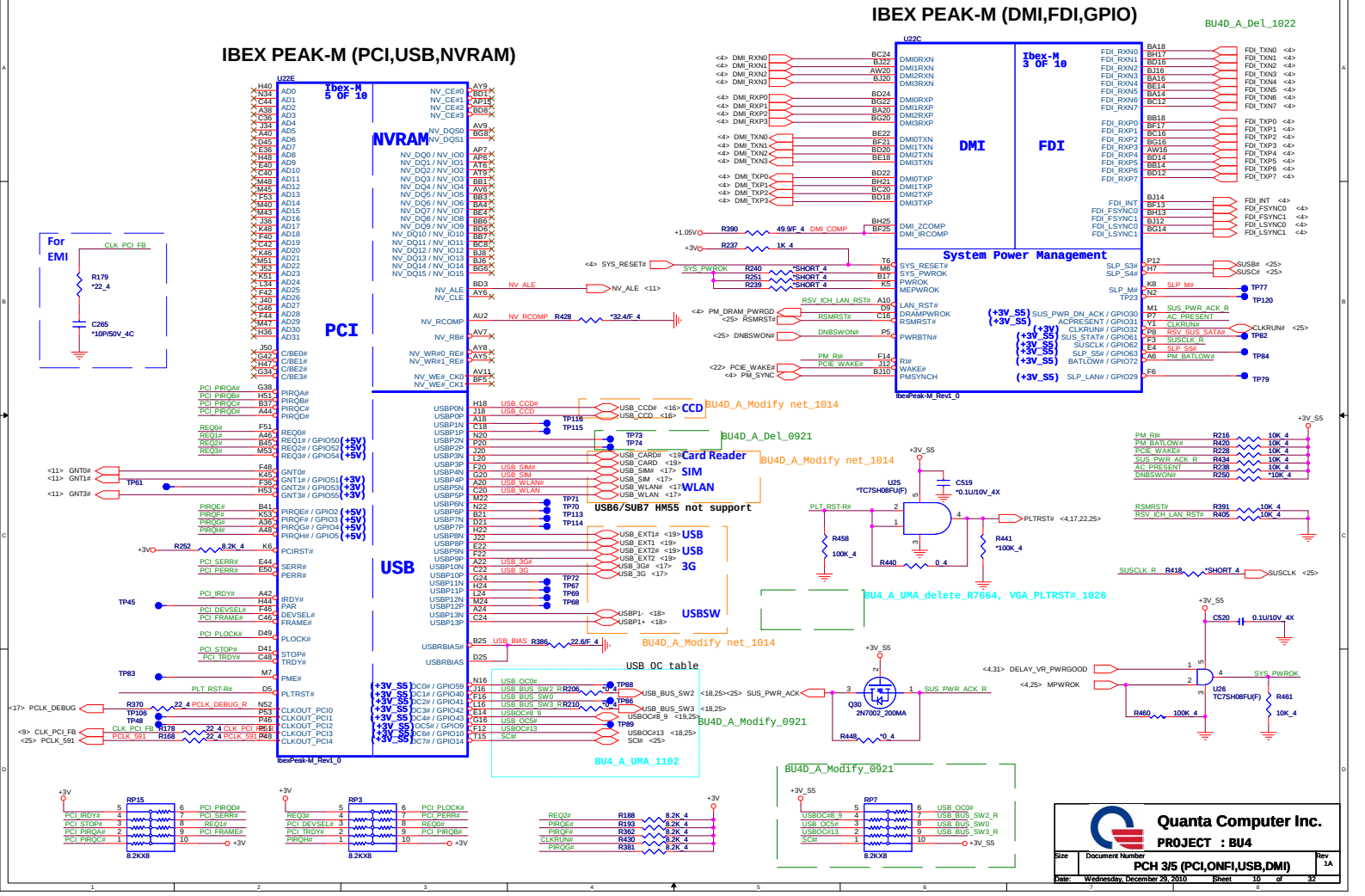


Quanta Computer Inc.

PROJECT : BU4

| Size | Document Number | Rev |
|---|---|---|
| | PCH 3/5 (PCI,ONFI,USB,DMI) | 1A |

Date: Wednesday, December 29, 2010 Sheet 10 of 32

# IBEX PEAK-M (GPIO,VSS_NCTF,RSVD)

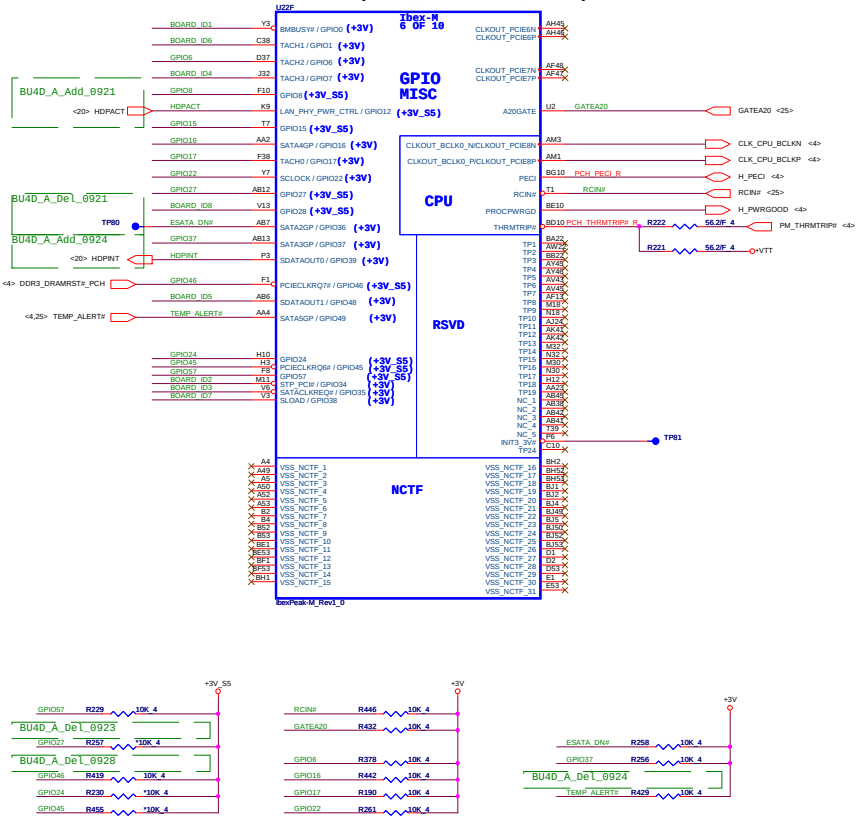


# IBEX PEAK-M (GND)

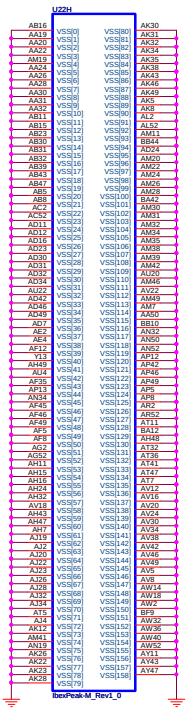





## PCH Strap Pin Configuration Table

**SPKR**

<8,21> PCBEEP — R433 *1K_4 — +3V

Reboot option at power-up
- 0 = Default Mode (Internal weak Pull-down)
- 1 = No Reboot Mode with TCO Disabled

**GNT3#/ GPIO55**

<10> GNT3# — R371 *10K_4

Top-Block Swap Override
- 0 = Top Block Swap Mode
- 1 = Default Mode (Internal pull-up)

**HDA_DOCK_EN #/GPIO33**

<8,25> PCH_GPIO33 — R201 1K_4 — JP1 *SHORT PAD

Flash Descriptor Security Override
- 0 = Flash Descriptor Security will be overridden
- 1 = Security measure defined in the Flash Descriptor will be enabled.

**GNT0#, GNT1#**

<10> GNT0# — GNT0# R183 *1K_4
<10> GNT1# — GNT1# R185 *1K_4

| Boot BIOS Strap | | |
|---|---|---|
| PCI_GNT0# | GNT1#1 | Boot BIOS Location |
| 0 | 0 | LPC |
| 0 | 1 | PCI |
| 1 | 0 | Reserved (NAND) |
| 1 | 1 | SPI |

**SPI_MOSI**

<8> SPI_SI_R — R425 *1K_4 — +3V

TPM Functionality Disable
- 1 = Enabled
- 0 = Disable

**NV_ALE**

<10> NV_ALE — R422 *10K_4 — +1.8V

IntelR Anti-Theft Technology HDD Data Protection (Intel AT-d) Enable
- 1 = Enabled
- 0 = Disabled (Default)

**GPIO8**

GPIO8 — R225 10K_4 — +3V_S5

Reserved

This signal has a weak internal pull up.
NOTE: This signal should not be pulled low

**GPIO15**

GPIO15 — R249 1K_4 — +3V_S5

Reserved
- 0 = Intel ME Crypto Transport Layer Security (TLS) cipher suite with no confidentiality
- 1 = Intel ME Crypto Transport Layer Security (TLS) cipher suite with confidentiality

**GPIO27**

GPIO27 — R231 *10K_4

On-Die PLL Voltage Regulator
- 0 = Disables the VccVRM. Need to use on-board filter circuits for analog rails.
- 1 = Enables the internal VccVRM to have a clean supply for analog rails. No need to use on-board filter circuit.

This signal has a weak internal pull-up.

+RTC_CELL — R396 330K_6 — PCH_INVRMEN <8>

```
INTVRMEN - Integrated SUS 1.1V VRM Enable
High - Enable Internal VRs
```

## BOARD ID SETTING

13" don't care

| Board ID | ID1 | ID2 | ID3 | ID4 | ID5 | ID6 | ID7 | ID8 |
|---|---|---|---|---|---|---|---|---|
| UMA SKU VGA SKU | H L | | | | | | | |
| W/ MDC W/O MDC | | H L | | | | | | |
| W/ HDMI W/O HDMI | | | H L | | | | | |
| W/O 3G W/ 3G | | | | H L | | | | |
| 15" 14" | | | | | H L | | | |
| W/O BT W/ BT | | | | | | H L | | |
| HW 2010 HW 2011 | | | | | | | H L | |
| 14 or 15" 13" | | | | | | | | H L |

BU4 PD

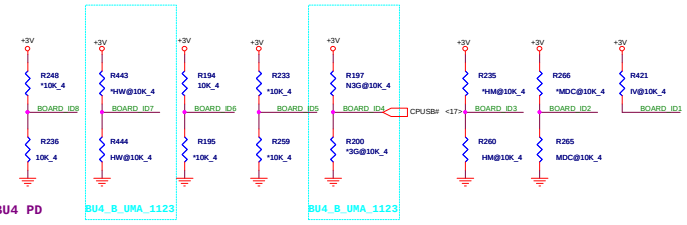


Quanta Computer Inc.

PROJECT : BU4

| Size | Document Number | Rev |
|---|---|---|
| | PCH 4/5 (GPIO & Strap) | 1A |

Date: Wednesday, December 29, 2010 Sheet 11 of 32

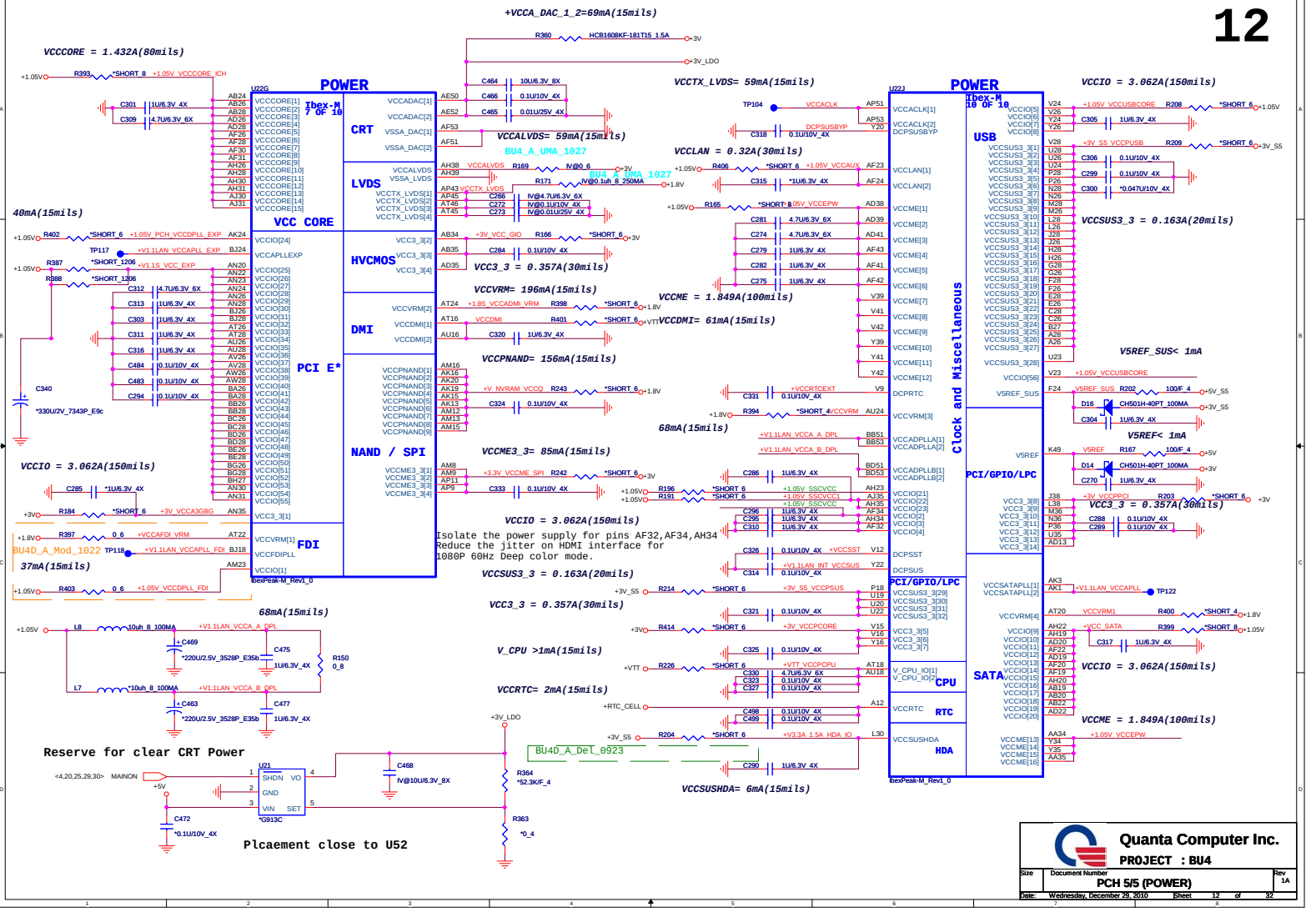
POWER
Ibex-M 7 OF 10
U22G
VCC CORE
PCI E*
CRT
LVDS
HVCMOS
DMI
NAND / SPI
FDI
VCCCORE = 1.432A(80mils)
+VCCA_DAC_1_2=69mA(15mils)
VCCTX_LVDS= 59mA(15mils)
VCCALVDS= 59mA(15mils)
VCCLAN = 0.32A(30mils)
VCCME = 1.849A(100mils)
VCCVRM= 196mA(15mils)
VCCDMI= 61mA(15mils)
VCCPNAND= 156mA(15mils)
VCCME3_3= 85mA(15mils)
VCCIO = 3.062A(150mils)
VCCSUS3_3 = 0.163A(20mils)
VCC3_3 = 0.357A(30mils)
V_CPU >1mA(15mils)
VCCRTC= 2mA(15mils)
VCCSUSHDA= 6mA(15mils)
40mA(15mils)
37mA(15mils)
68mA(15mils)
Isolate the power supply for pins AF32,AF34,AH34
Reduce the jitter on HDMI interface for
1080P 60Hz Deep color mode.
Reserve for clear CRT Power
Plcaement close to U52
POWER
Ibex-M 10 OF 10
U22J
Clock and Miscellaneous
USB
PCI/GPIO/LPC
SATA
CPU
RTC
HDA
VCCIO = 3.062A(150mils)
VCCSUS3_3 = 0.163A(20mils)
V5REF_SUS< 1mA
V5REF< 1mA
VCC3_3 = 0.357A(30mils)
VCCME = 1.849A(100mils)
Quanta Computer Inc.
PROJECT : BU4
Size
Document Number
PCH 5/5 (POWER)
Rev
1A
Date: Wednesday, December 29, 2010
Sheet 12 of 32

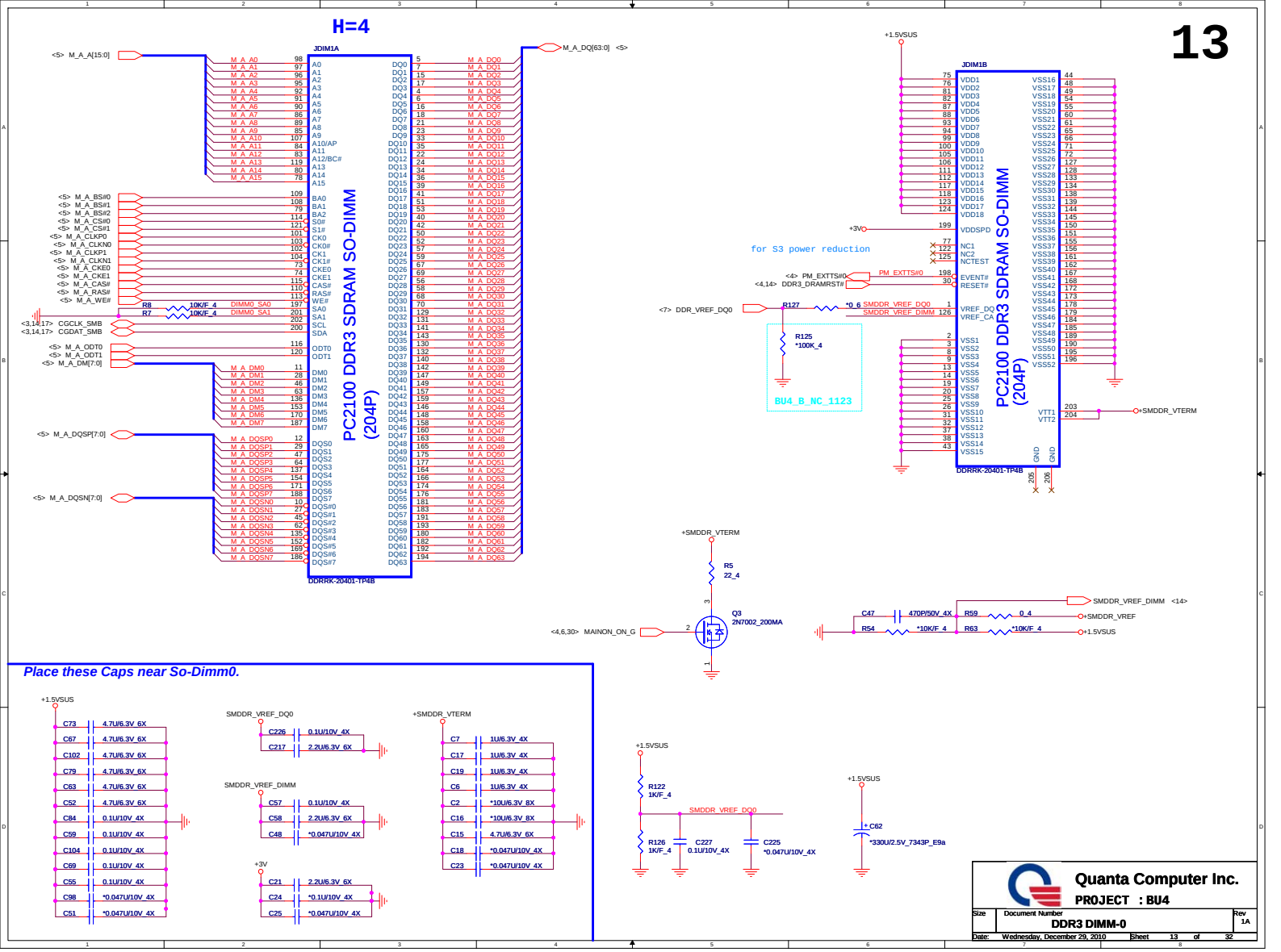


Quanta Computer Inc.

PROJECT : BU4

| Size | Document Number | Rev |
|---|---|---|
| | DDR3 DIMM-0 | 1A |

Date: Wednesday, December 29, 2010 Sheet 13 of 32

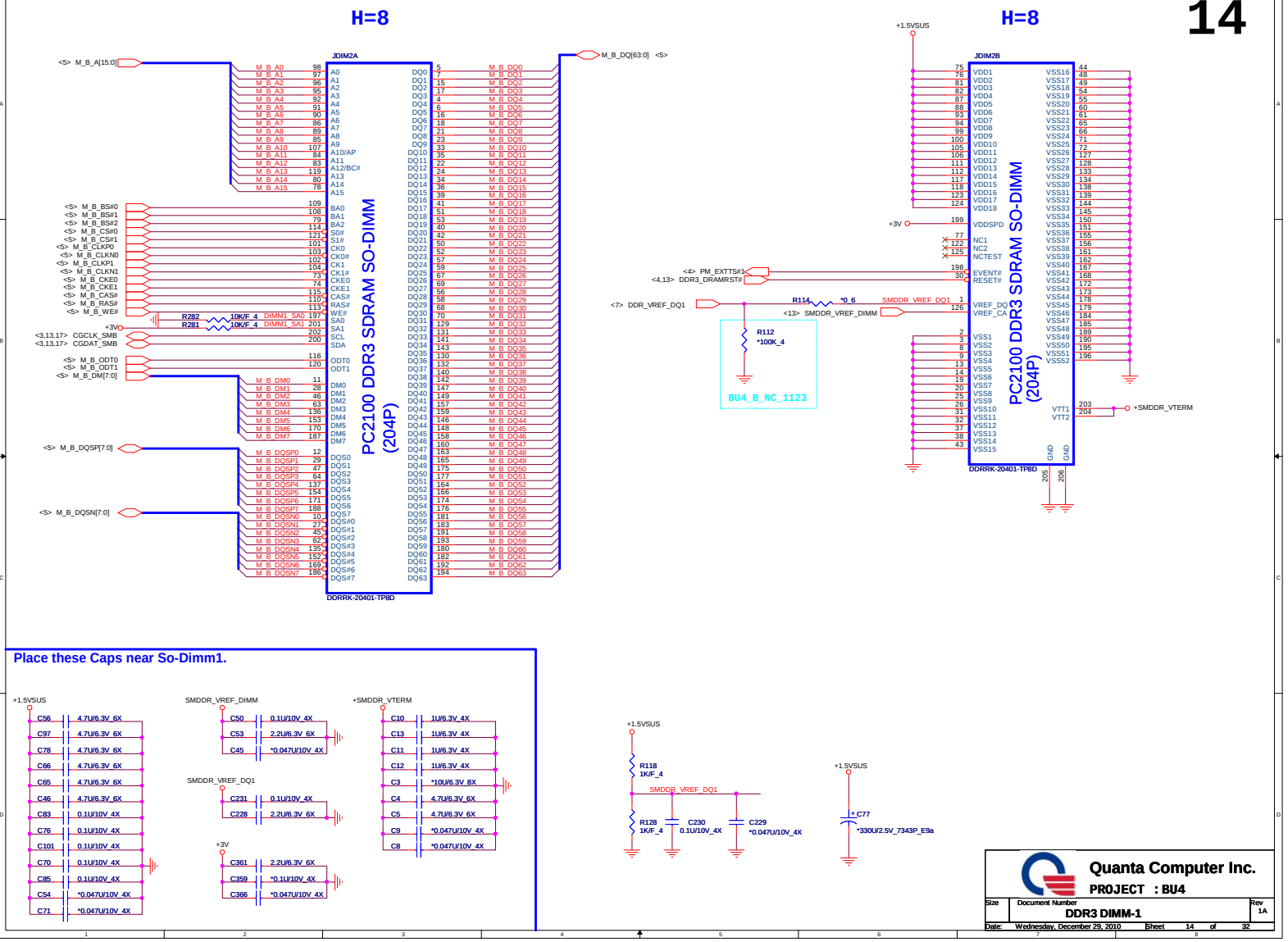


Quanta Computer Inc.

PROJECT : BU4

| Size | Document Number | Rev |
|---|---|---|
| | DDR3 DIMM-1 | 1A |

Date: Wednesday, December 29, 2010 Sheet 14 of 32

## HDMI Conn <HDM>

### HDMI-CONN

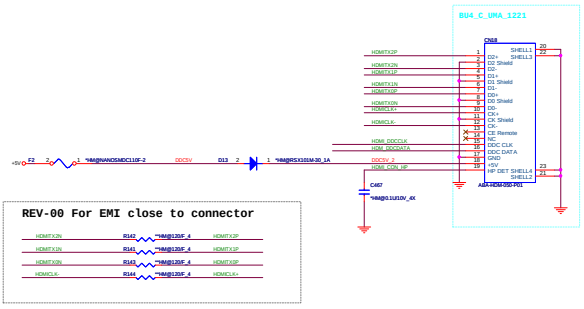


## HDMI-SMBus <HDM>

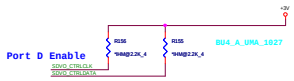


## HDMI-passive level shift <HDM> BU4_A_UMA_1026

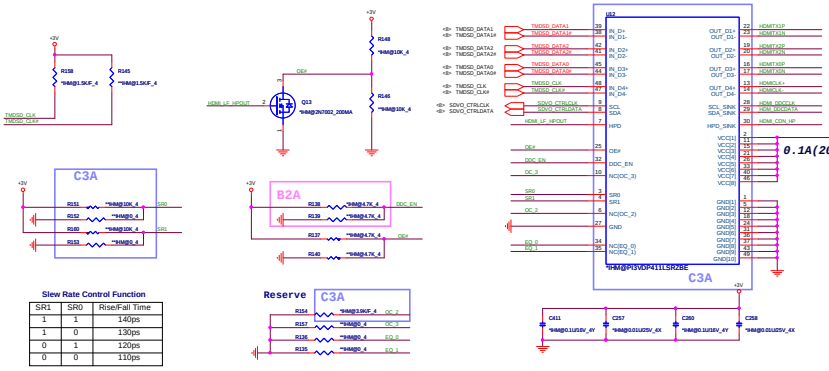


### Slew Rate Control Function

| SR1 | SR0 | Rise/Fall Time |
|---|---|---|
| 1 | 1 | 140ps |
| 1 | 0 | 130ps |
| 0 | 1 | 120ps |
| 0 | 0 | 110ps |







## HDMI-HPD <HDM>

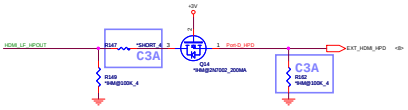


Quanta Computer Inc.

PROJECT : BU4

| Size | Document Number | Rev |
|---|---|---|
| | HDMI CONN | 1A |

Date: Wednesday, December 29, 2010 Sheet 15 of 32

## CCD <CCD>

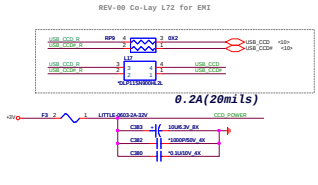


## LCD POWER SWITCH <LDS>

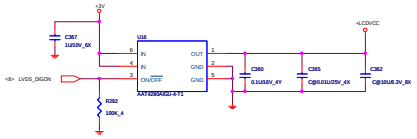


## HALL SENSOR&BACK LIGHT SWITCH <HSR>

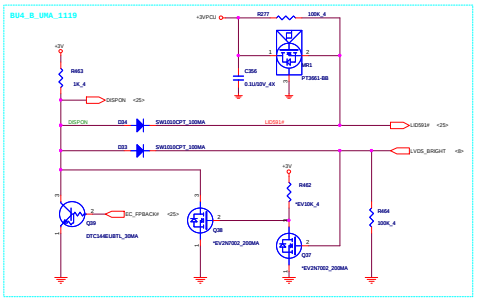


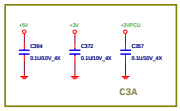


## LCD Panel Module <LDS> <ADO>

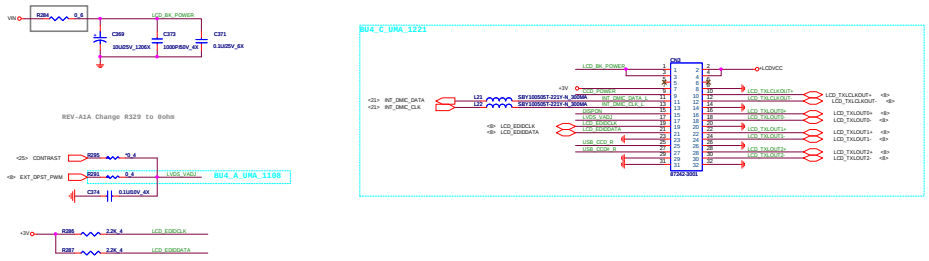


## CRT CONN Interface <CRT>

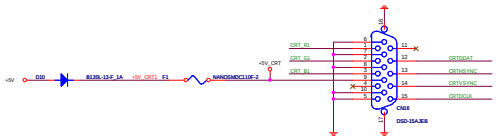


## <CRT>

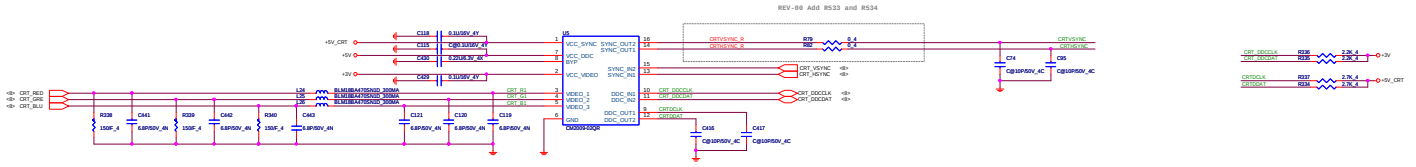


| | | |
|---|---|---|
| Quanta Computer Inc. | PROJECT : BU4 | |
| Size | Document Number: LCD/LED Panel/CCD | Rev 1A |
| Date: Wednesday, December 26, 2007 | Sheet 16 of 22 | |

## MINI Card Slot#1 (WiFi) <MNW>

Before RAMP must to remove debug card component

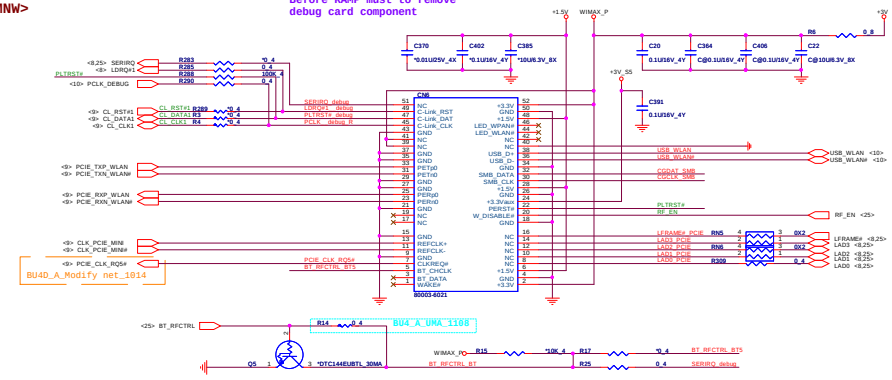





### SMBus(DDR3/WLAN/3G)

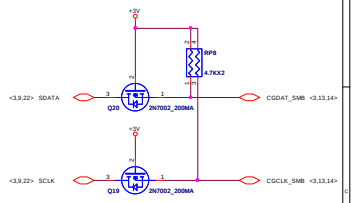


## MINI Card Slot#2 3G <MNT>

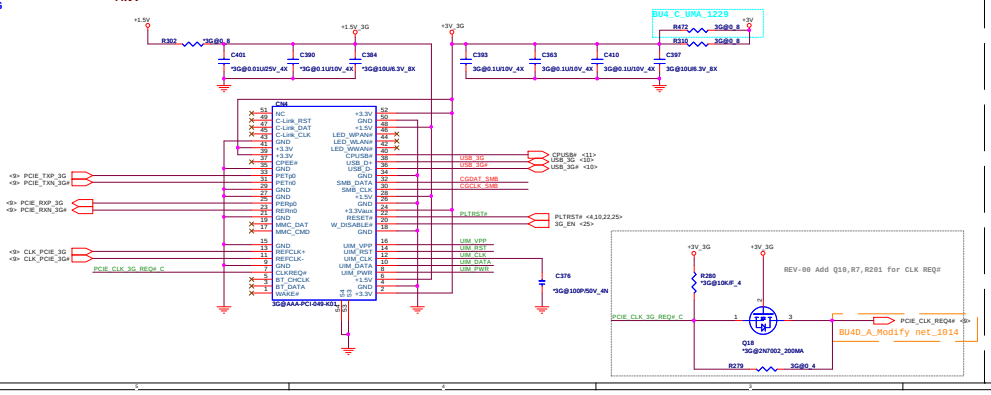


## For SIM Card on daughtor board

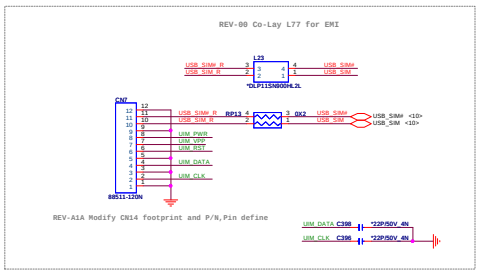


**Quanta Computer Inc.**

**PROJECT : BU4**

| Size | Document Number | Rev |
|---|---|---|
| | MINI CARD(WLAN/3G/SIM Card) | 1A |

Date: Wednesday, December 29, 2010 Sheet 17 of 32

# USB w S&C MAXIM solution <SLC>

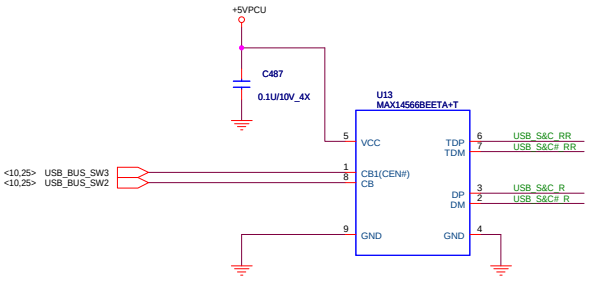


| CB0 | CB1 | Status |
|---|---|---|
| 0 | 0 | Auto mode |
| 0 | 1 | Force dedicated charger mode |
| 1 | X | Pass-Through(USB) mode: Connect DP/DM to TDP/TDM |

## USB 3.0 CONN <USB>

REV-00 Co-Lay L73 for EMI

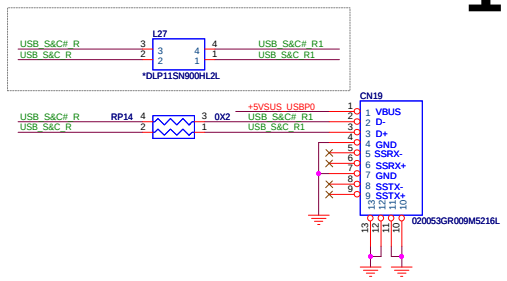


only USB2.0: DFHS04FR163
USB3.0: DFHD09MR002

## <U2B>

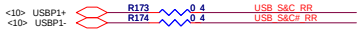


## USB 3.0 Power switch <USB> <U2B>

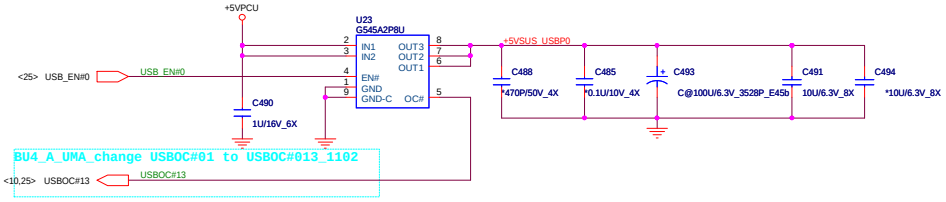





Quanta Computer Inc.
PROJECT : BU4

| Size | Document Number | Rev |
|---|---|---|
| | USB SW | 1A |

Date: Wednesday, December 29, 2010 Sheet 18 of 32

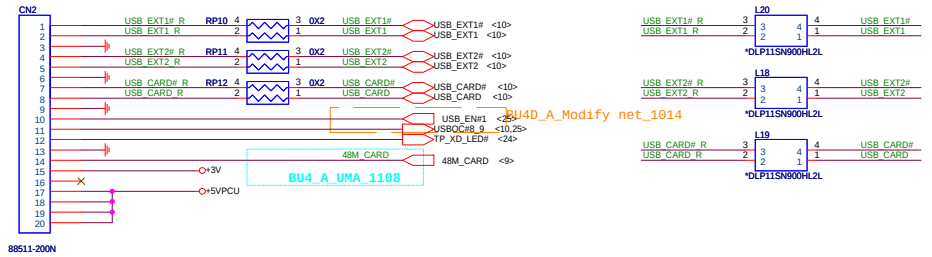


REV-00 Co-Lay L74,L75,L76 for EMI

Quanta Computer Inc.

PROJECT : BU4

| Size | Document Number | Rev |
|---|---|---|
| | HDMI CONN | 1A |

Date: Wednesday, December 29, 2010 Sheet 19 of 32

## HDD Interface <HDD>

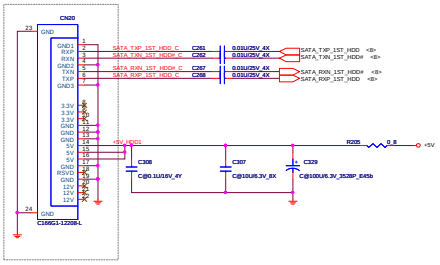


REV-00 Add PIN23,24 to GND

## ODD Interface <ODD>

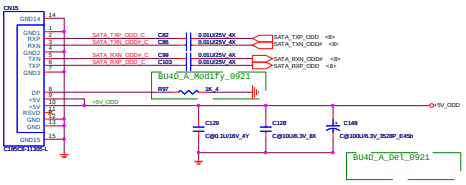


## ODD Zero power . (Only for Intel) <OZP>

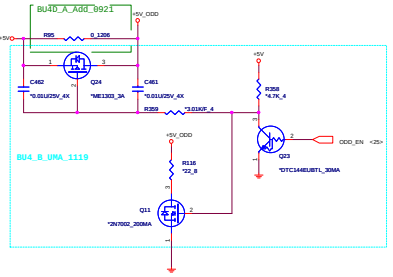


## 3D-LDO Power <GSR>

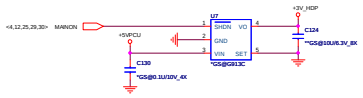


## 3D-Sensor IC <GSR>

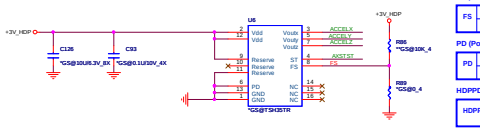


**FS (Full Scale) selection**

| FS | 0 | 1 |
|---|---|---|
| | 2g Full-Scale | 6g Full-Scale |

**PD (Power Down) selection**

| PD | 0 | 1 |
|---|---|---|
| | Normal Mode | Power-down mode |

**HDPPD selection**

| HDPPD | 0 | 1 |
|---|---|---|
| | Normal Mode | Power-down mode |

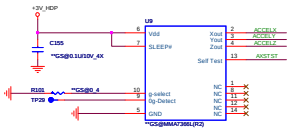


## 3D-SMBus <GSR>

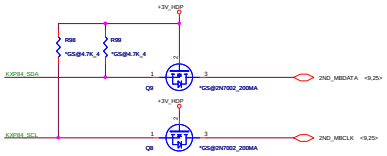


## 3D-u-micro P <GSR>

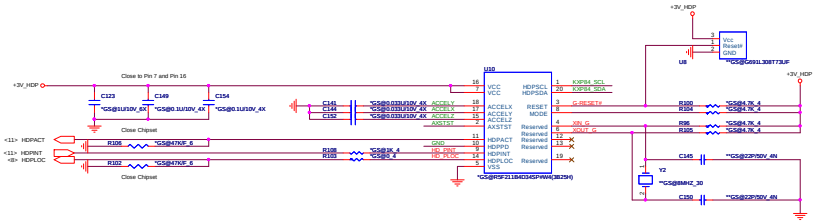


| | | |
|---|---|---|
| Quanta Computer Inc. | | |
| PROJECT : BU4 | | |
| Size | Document Number: HDD/ODD/MDC | Rev 1A |
| Date: Wednesday, December 29, 2010 | Sheet 20 of 32 | |

## Codec (CX20671-21Z) <ADO>

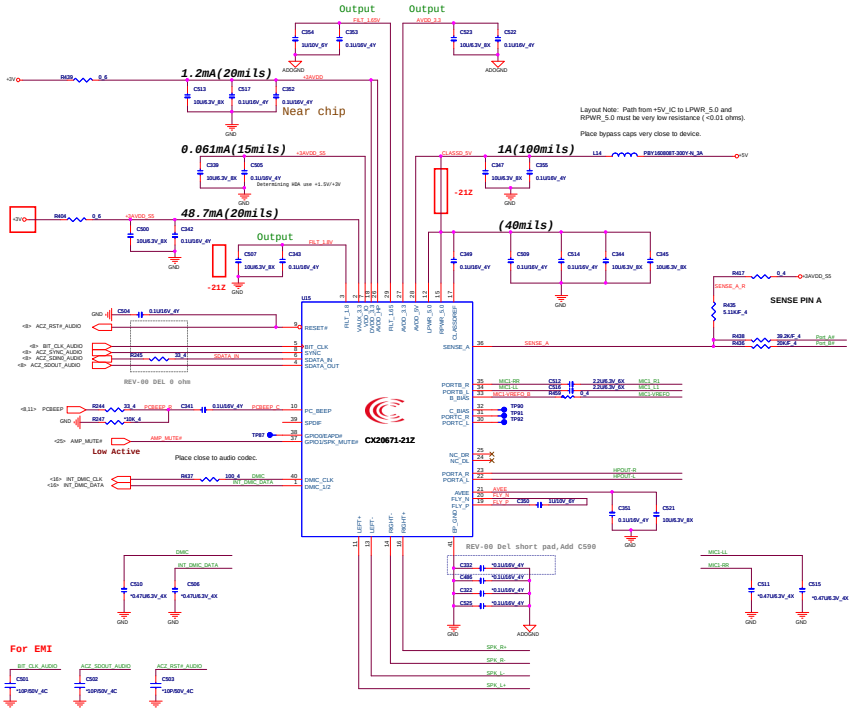


## HP <ADO> <EMC>

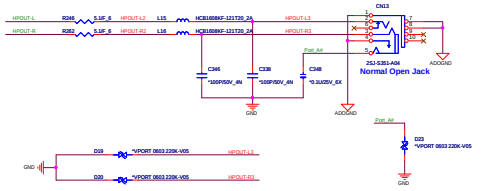


## External MIC <ADO> <EMC>

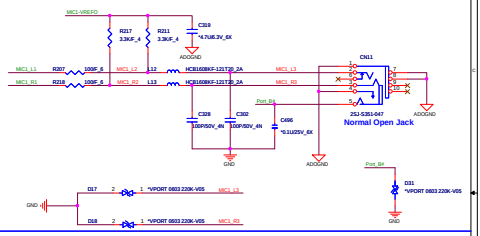


## Internal Speaker <ADO> <EMC>

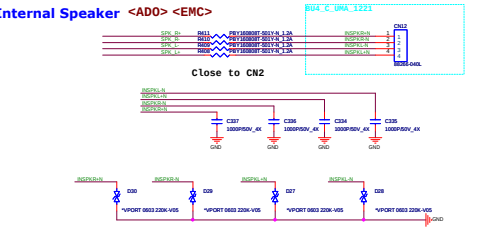


| | | |
|---|---|---|
| Quanta Computer Inc. | | |
| PROJECT : BU4 | | |
| Size | Document Number: Audio Codec(CX20671-21Z) | Rev 1A |
| Date: Wednesday, December 30, 2009 | Sheet 23 of 32 | |

# Atheros Lan <LAN> <LNG> <LN1>



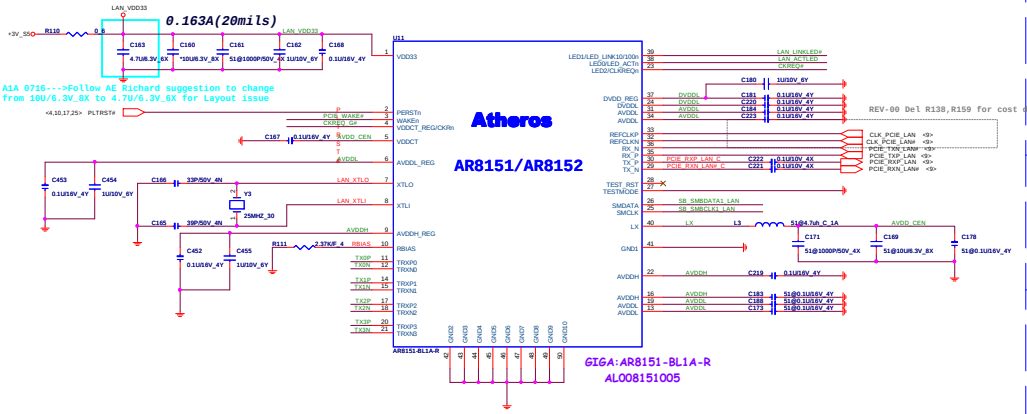


## <LAN> <LNG> <LN1>

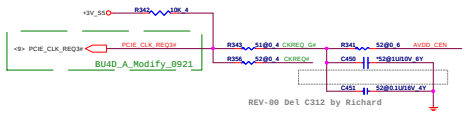


## LAN-Wake up function



## LAN-SM-Bus <LAN>

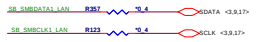

## PLACE NEAR LAN IC SIDE <LAN> <LNG>

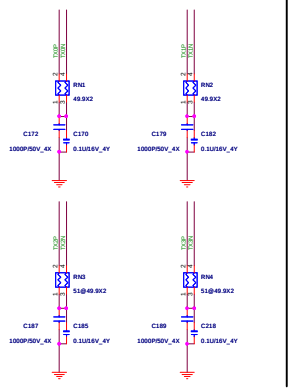

## TRANSFORMER <LAN> <LNG>

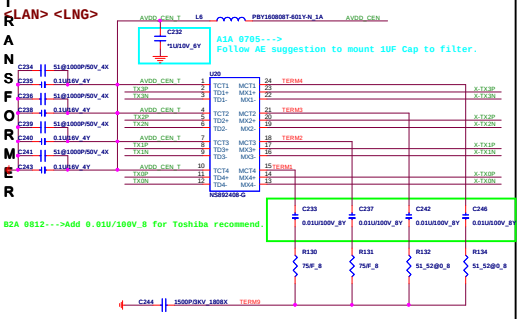


## RJ45 <LAN> <LNG> <LN1>

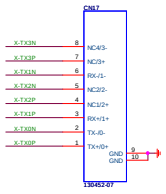

| | | |
|---|---|---|
| LED0 = LAN_ACTLED | 1 | Over-clocking enable (default = 1) |
| | 0 | Over-clocking disable |
| LED1 = LAN_LINKLED# | 1 | SWR switch-mode regulator select Giga LAN pull High (default = 1) |
| | 0 | LDO linear regulator select 10/100M LAN pull Low |
| CKREQ# or CKREQ_G# | 1 | Normal function |
| | 0 | ATE test mode |

Power on Strapping pin

Close to LED

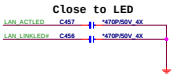

Quanta Computer Inc.
PROJECT : BU4

| Size | Document Number | Rev |
|---|---|---|
| | Atheros Lan | 1A |

Date: Wednesday, December 29, 2010 Sheet 22 of 32

## INT KeyBoard <KBC> <EMI>

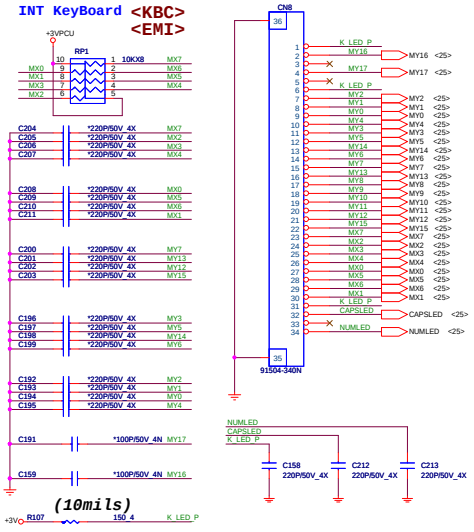


## TP board <TPD> <EMI>

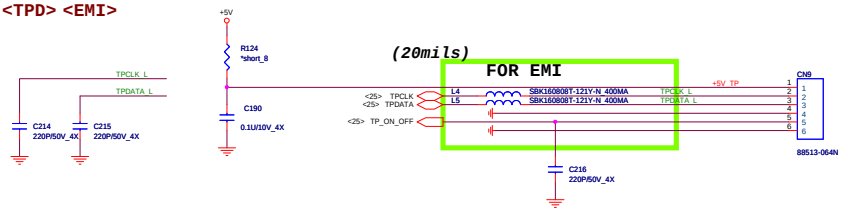


## Power board <PSW>

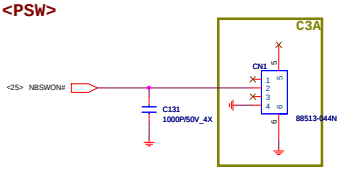


## HOLE

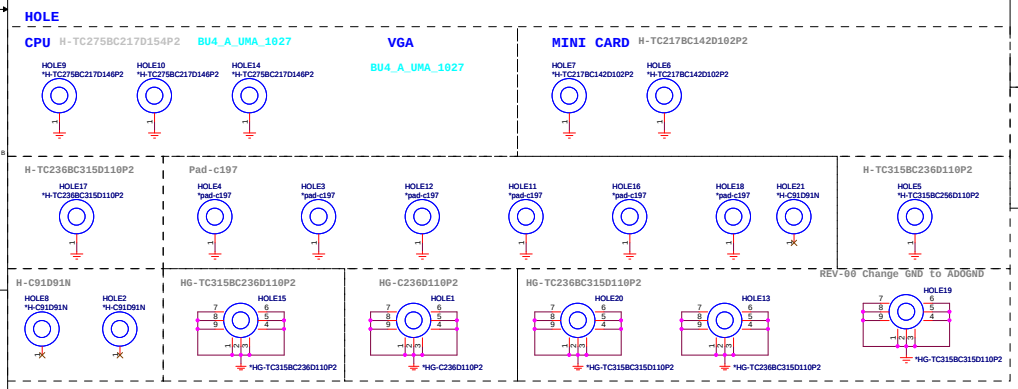


## HDD&ODD

Quanta Computer Inc.

PROJECT : BU4

| Size | Document Number | Rev |
|---|---|---|
| | KB/TP&TP/PB/FL/LEB/MMB/B-CAS | 1A |

Date: Wednesday, December 29, 2010 Sheet 23 of 32

# LED <LED>

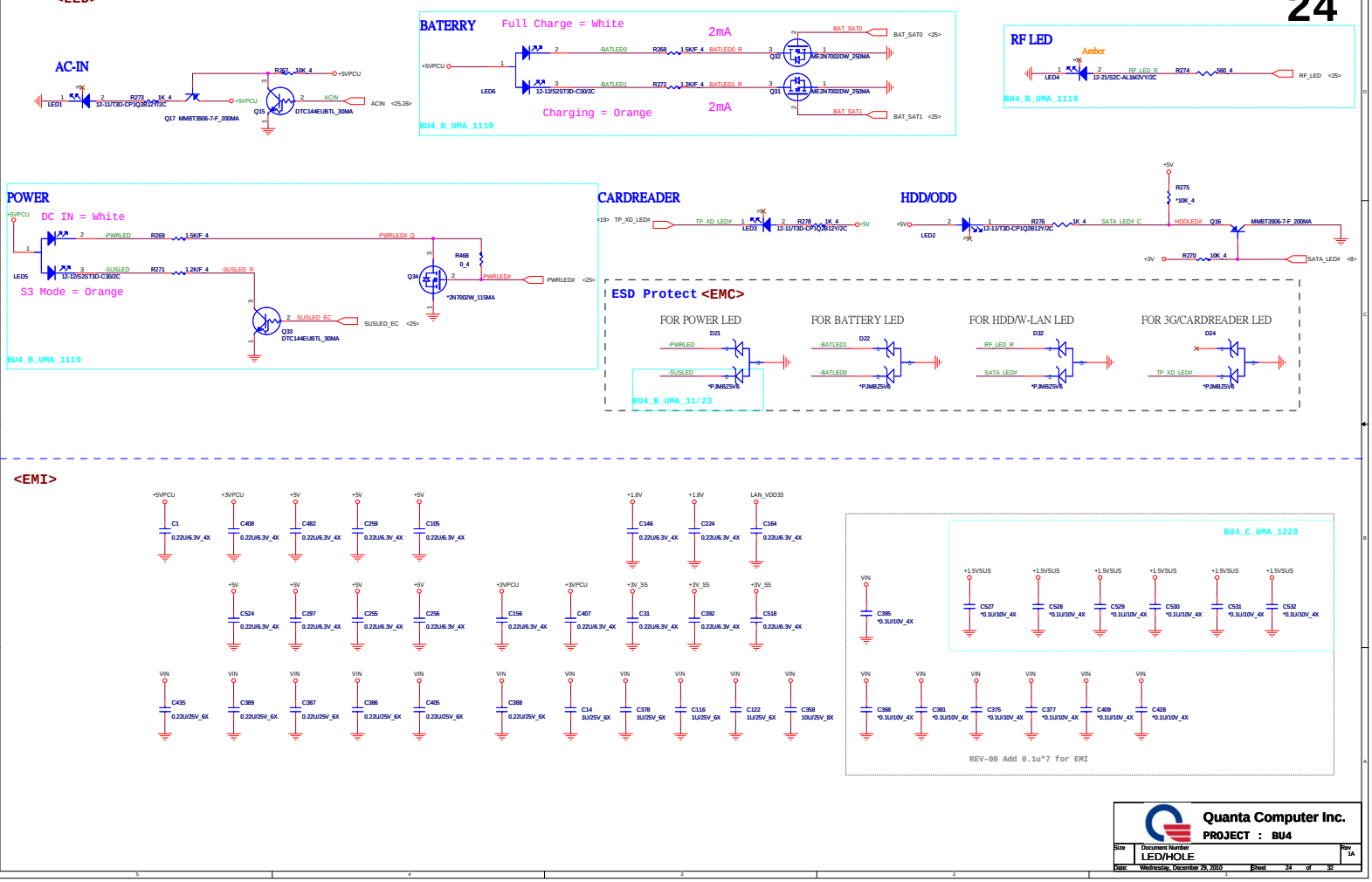


# <EMI>




| | | |
|---|---|---|
| Quanta Computer Inc. | PROJECT : BU4 | |
| Size | Document Number: LED/HOLE | Rev: 1A |
| Date: Wednesday, December 29, 2010 | Sheet 24 of 32 | |

## EC

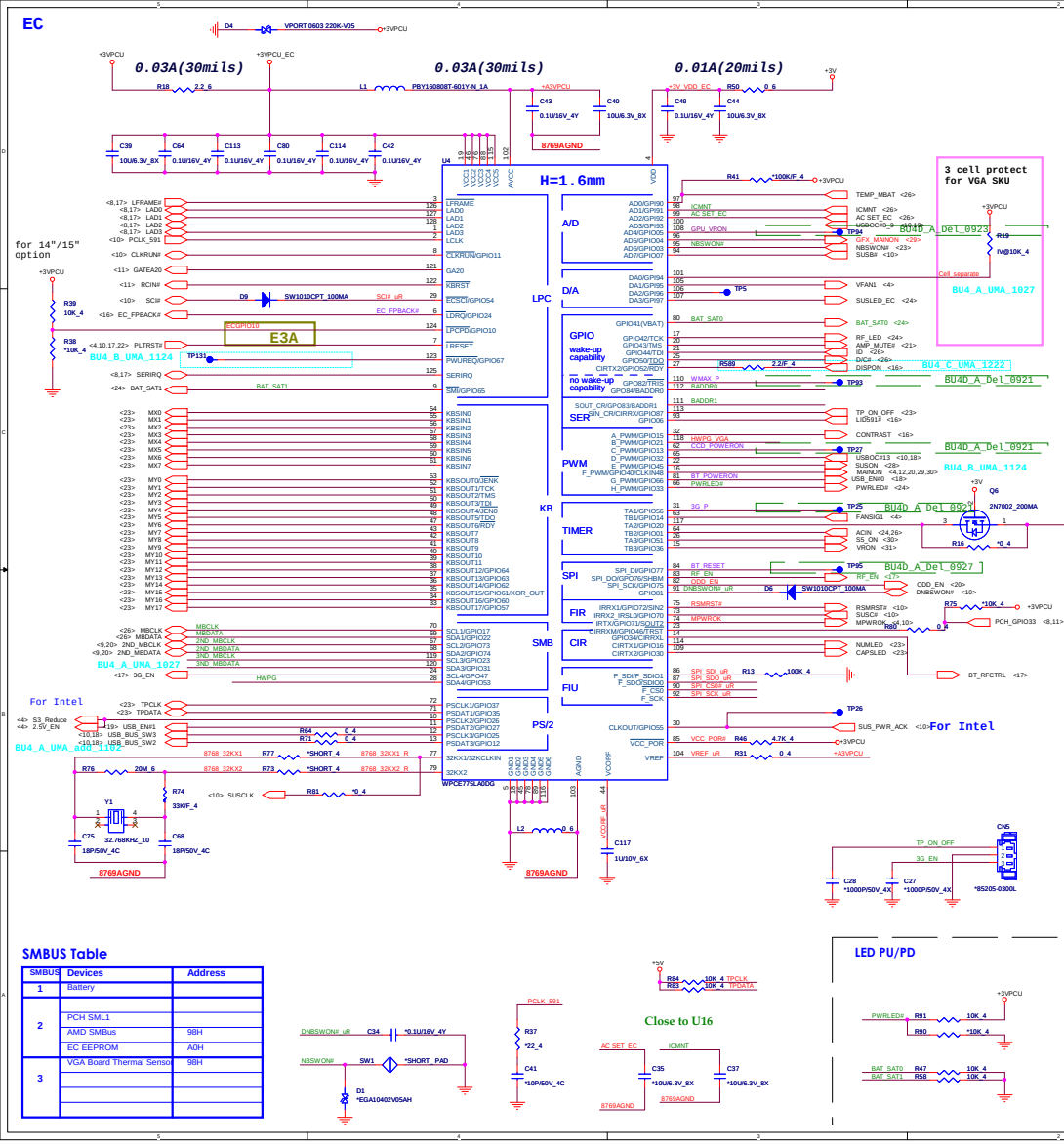


## SM BUS PU

## I/O Base Address

| | I/O Address | |
|---|---|---|
| BADDR1-0 | Index | Data |
| 0 0 | XOR TREE TEST MODE | |
| 0 1 | CORE DEFINED | |
| 1 0 | 2Eh | 2Fh |
| 1 1 | 164Eh | 164Fh |

SHBM=0 Enable shared memory with host BIOS

Disabled ('1') if using FWH device on LPC.
Enabled ('0') if using SPI flash for both system BIOS and EC firmware

## ID

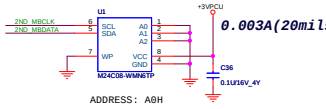


## SPI FLASH

For Intel

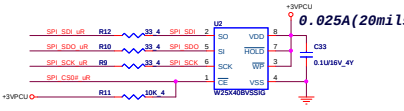


| | | |
|---|---|---|
| Intel | 512KB | W25X40BVSSIG |
| AMD | 2MB | W25Q16BVSSIG |

## INTERNAL KEYBOARD STRIP SET

## HWPG

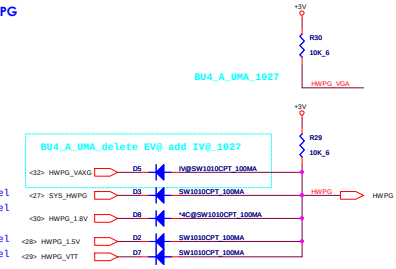


## SMBUS Table

| SMBUS | Devices | Address |
|---|---|---|
| 1 | Battery | |
| 2 | PCH SML1 | |
| | AMD SMBus | 98H |
| | EC EEPROM | A0H |
| 3 | VGA Board Thermal Sensor | 98H |
| | | |
| | | |
| | | |




Quanta Computer Inc.
PROJECT : BU4

| Size | Document Number | Rev |
|---|---|---|
| | EC WPCE775L | 1A |

Date: Wednesday, December 29, 2010 Sheet 25 of 32

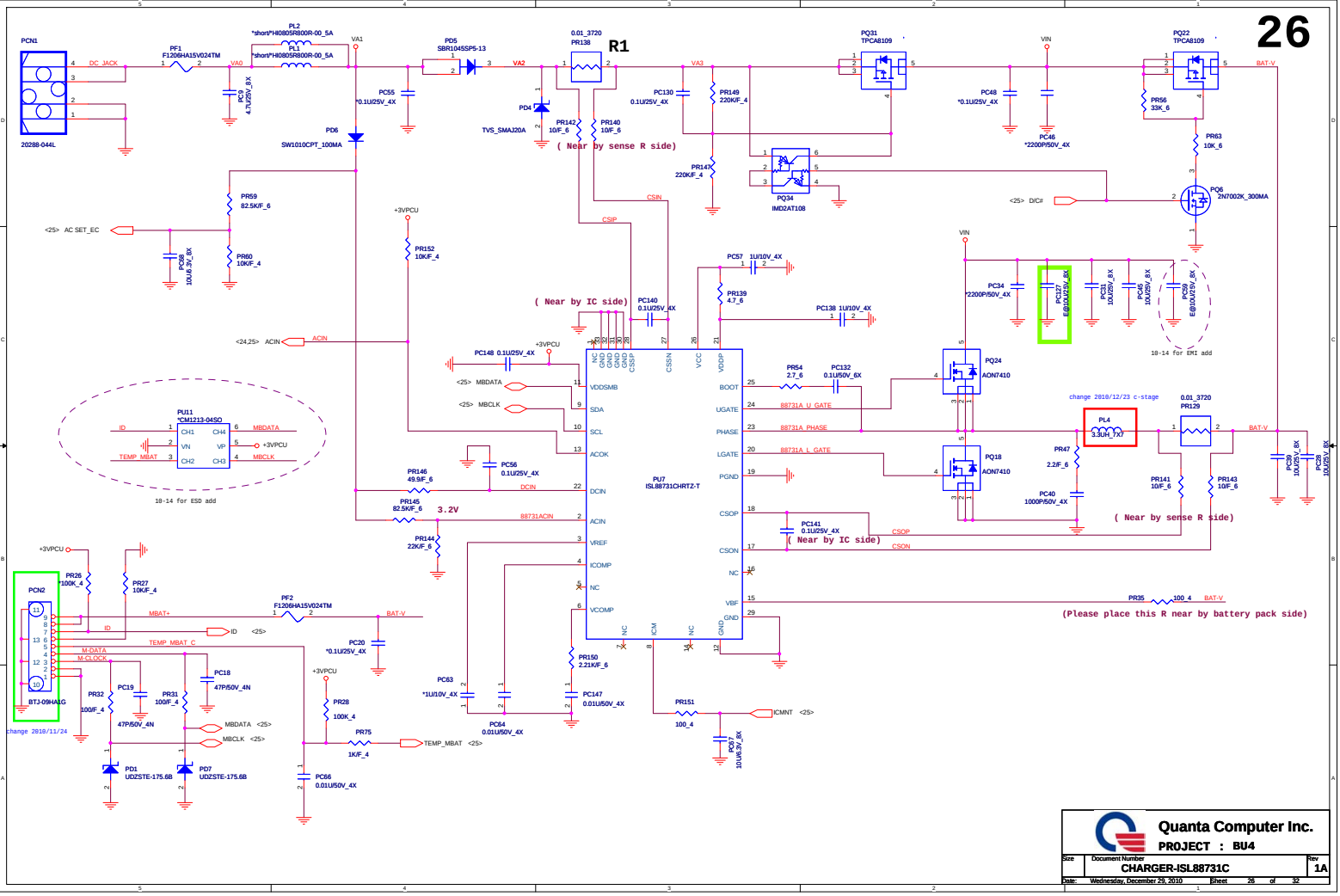


Quanta Computer Inc.

PROJECT : BU4

| Size | Document Number | Rev |
|---|---|---|
| | CHARGER-ISL88731C | 1A |

Date: Wednesday, December 29, 2010 Sheet 26 of 32

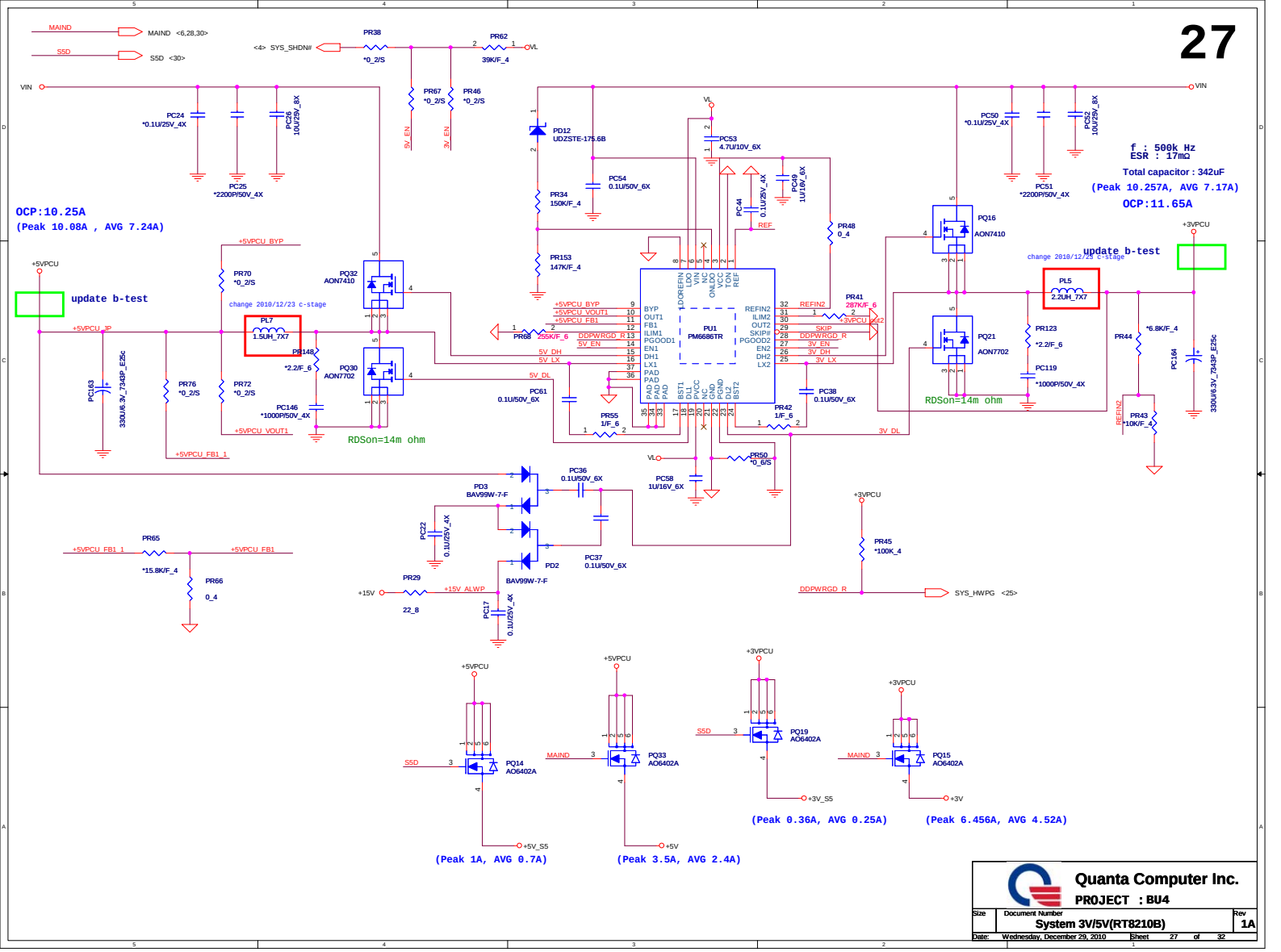


| | | |
|---|---|---|
| Quanta Computer Inc. | | |
| PROJECT : BU4 | | |
| Size | Document Number: System 3V/5V(RT8210B) | Rev: 1A |
| Date: Wednesday, December 29, 2010 | Sheet 27 of 32 | |

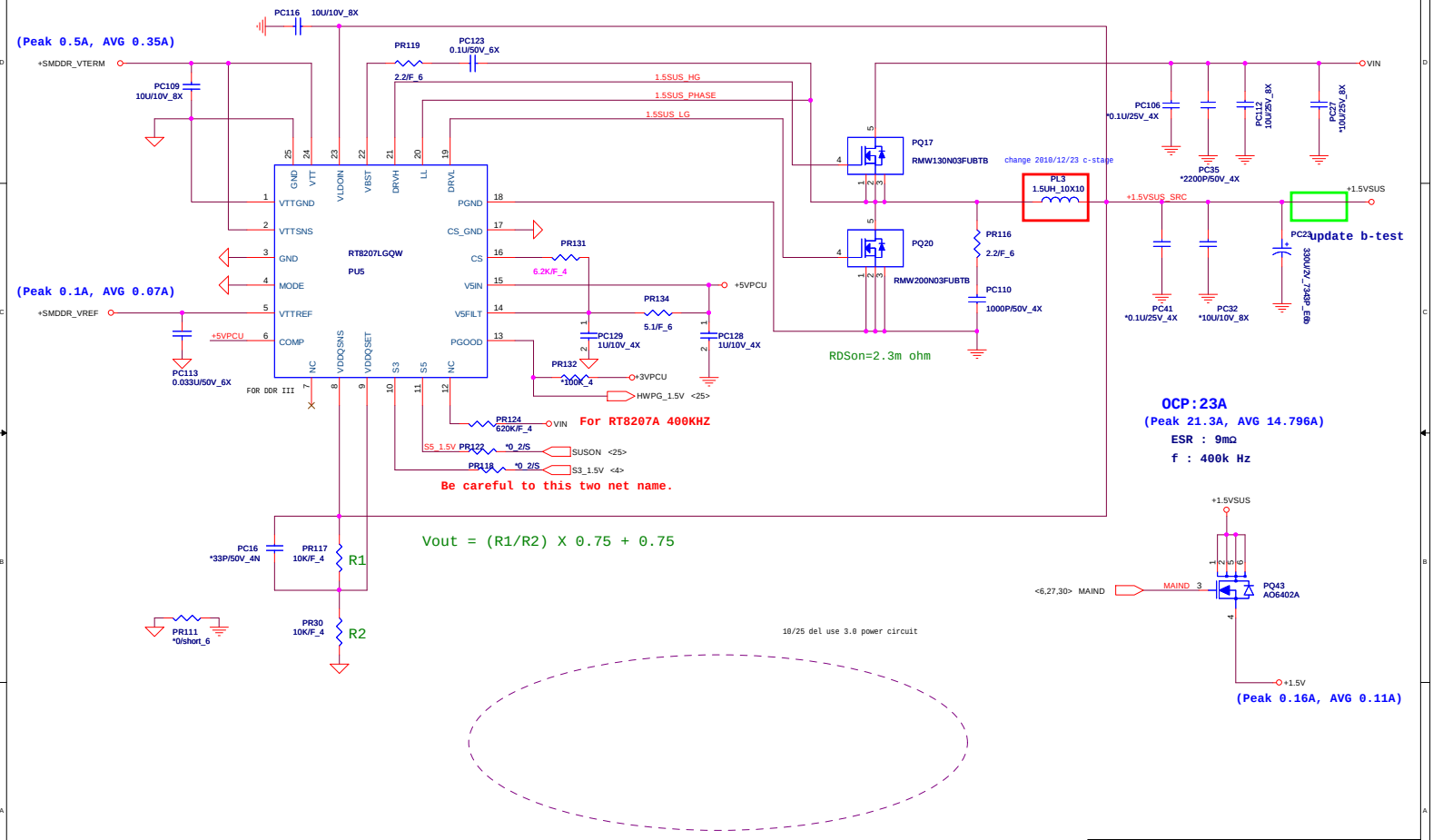


| | | |
|---|---|---|
| Quanta Computer Inc. | | |
| PROJECT : BU4 | | |
| Size | Document Number: DDR 1.5V(RT8207L)/1.05VSUS | Rev 1A |
| Date: Wednesday, December 29, 2010 | Sheet 28 of 32 | |

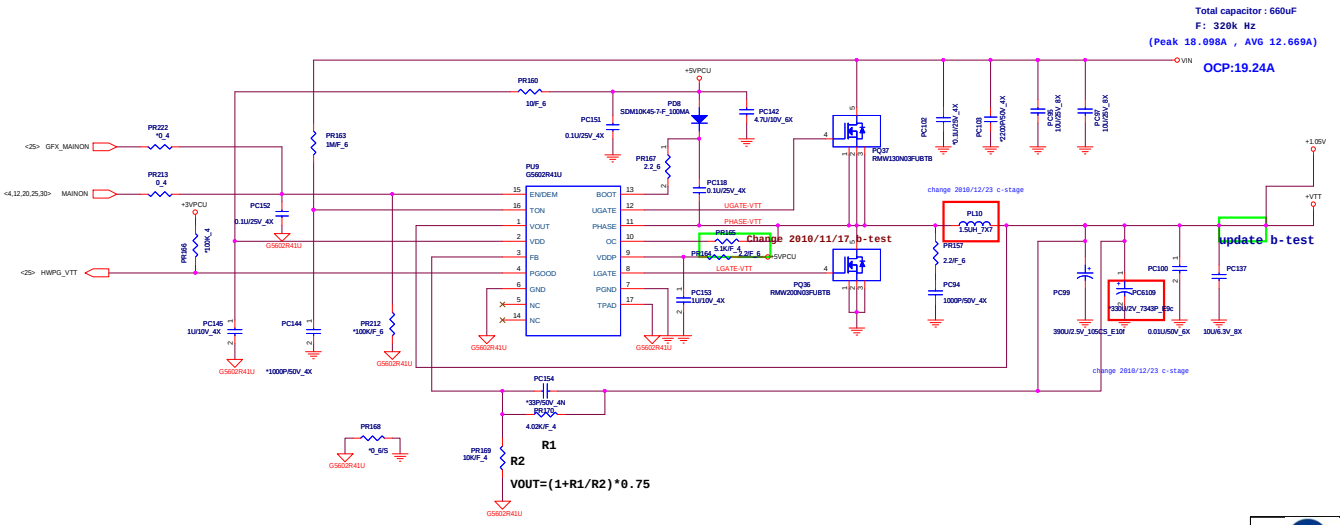


Quanta Computer Inc.

PROJECT : BU4

| Size | Document Number | Rev |
|---|---|---|
| | +VTT /+1.05V(RT8238A) | 1A |

Date: Wednesday, December 29, 2010 Sheet 29 of 32

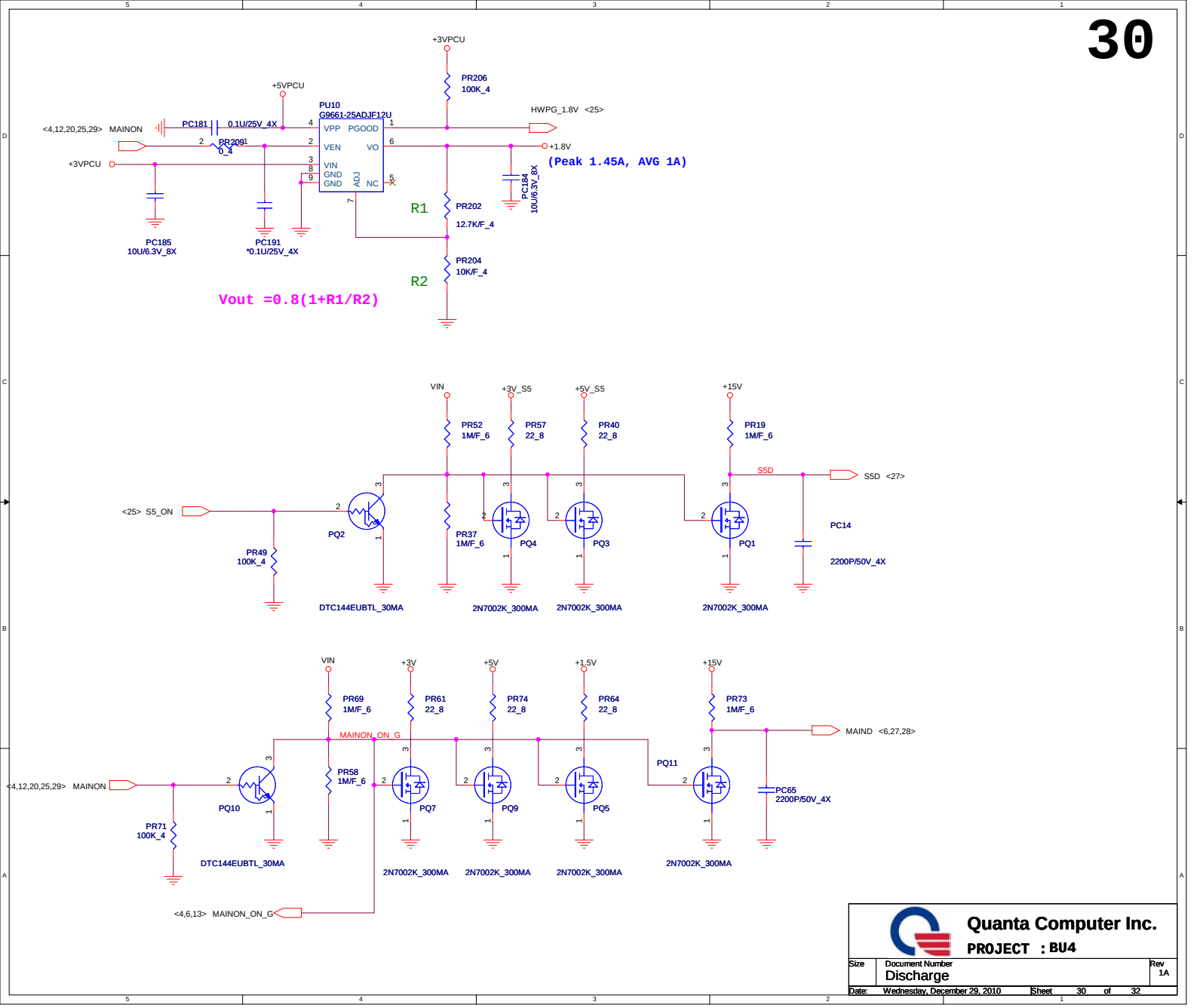


| | | |
|---|---|---|
| Quanta Computer Inc. | | |
| PROJECT : BU4 | | |
| Size | Document Number: Discharge | Rev 1A |
| Date: Wednesday, December 29, 2010 | Sheet 30 of 32 | |

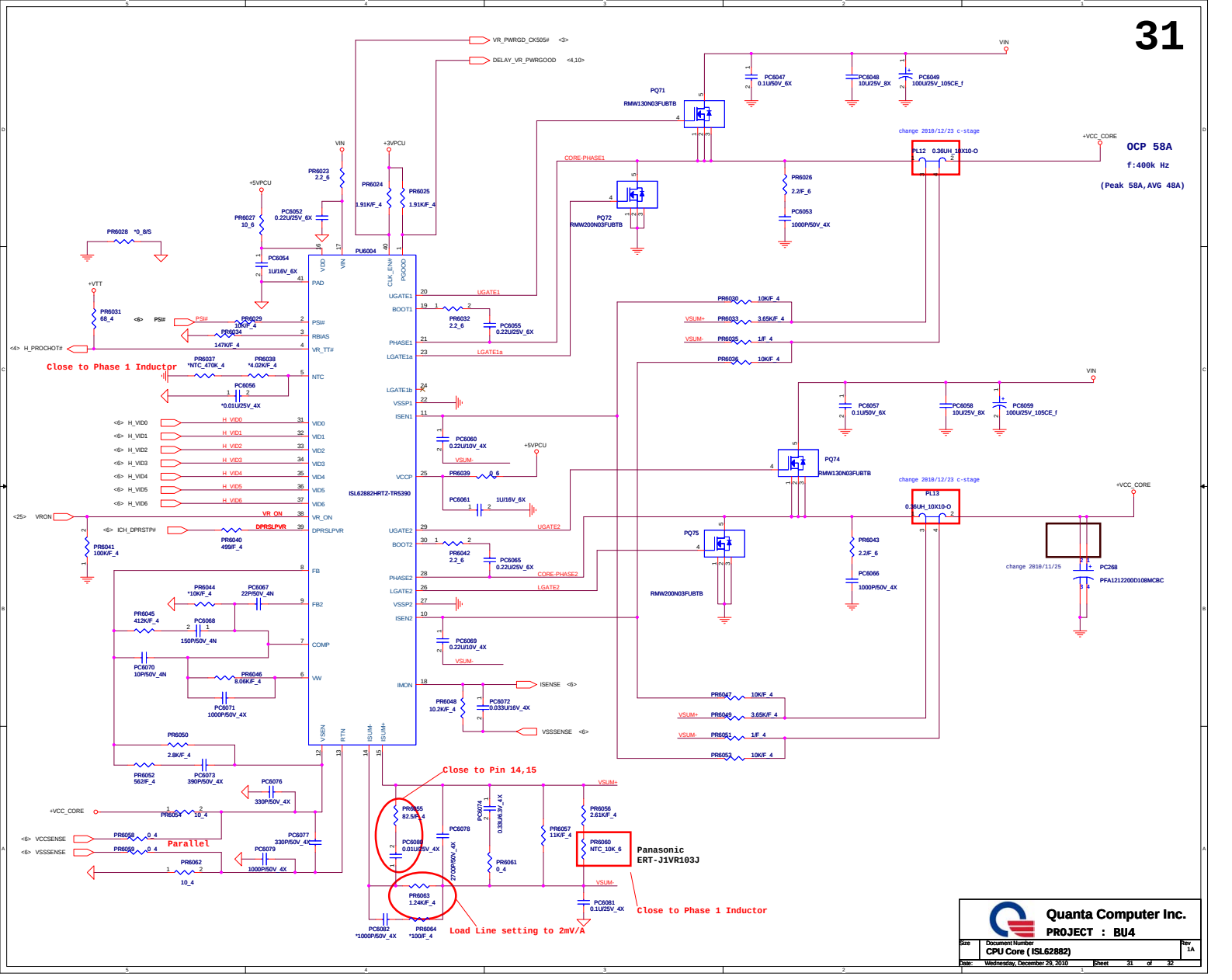


| | |
|---|---|
| Quanta Computer Inc. | |
| PROJECT : BU4 | |
| Size | Document Number: CPU Core ( ISL62882) — Rev 1A |
| Date: Wednesday, December 29, 2010 | Sheet 31 of 32 |

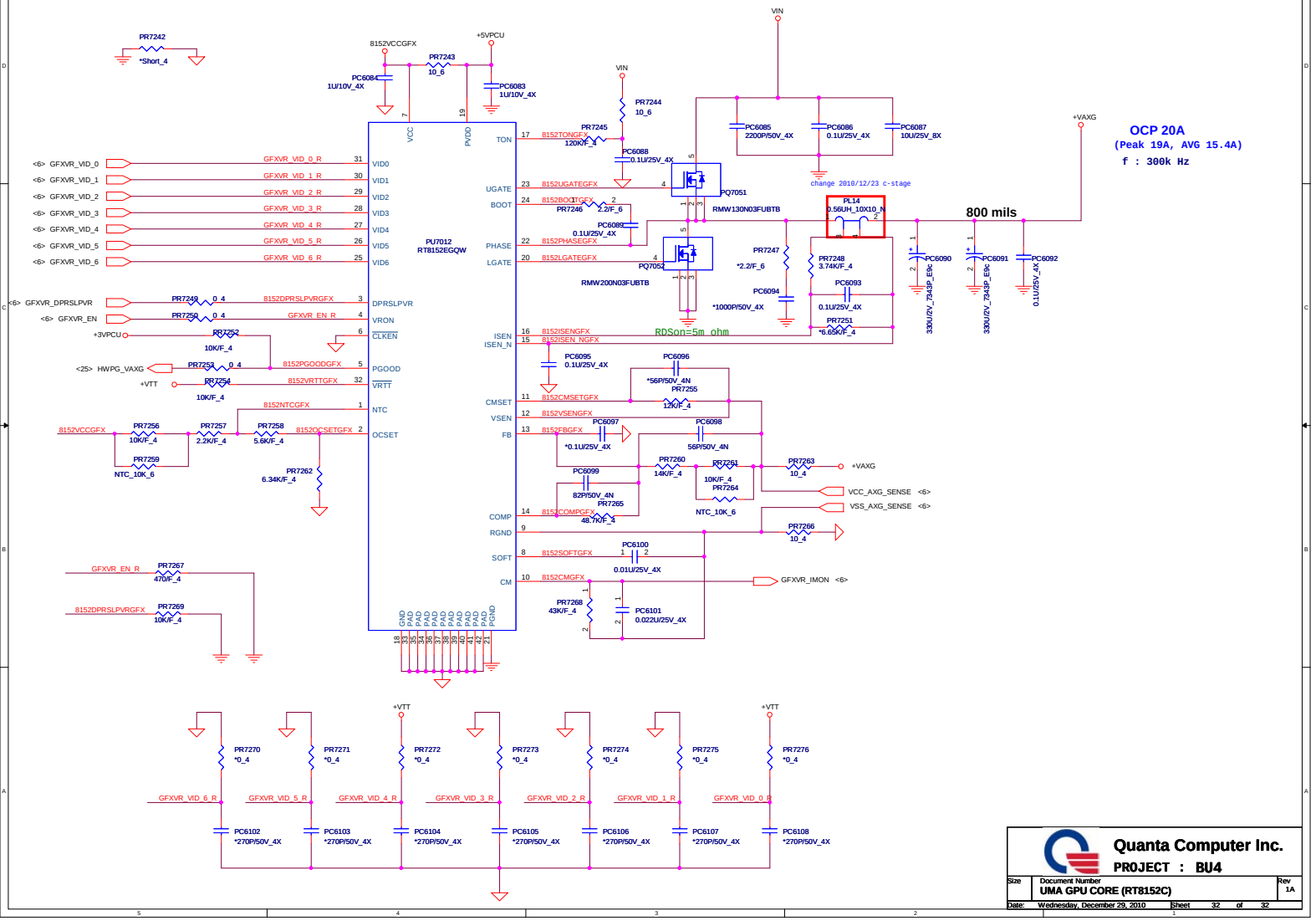


Quanta Computer Inc.

PROJECT : BU4

| Size | Document Number | Rev |
|---|---|---|
| | UMA GPU CORE (RT8152C) | 1A |

Date: Wednesday, December 29, 2010 Sheet 32 of 32

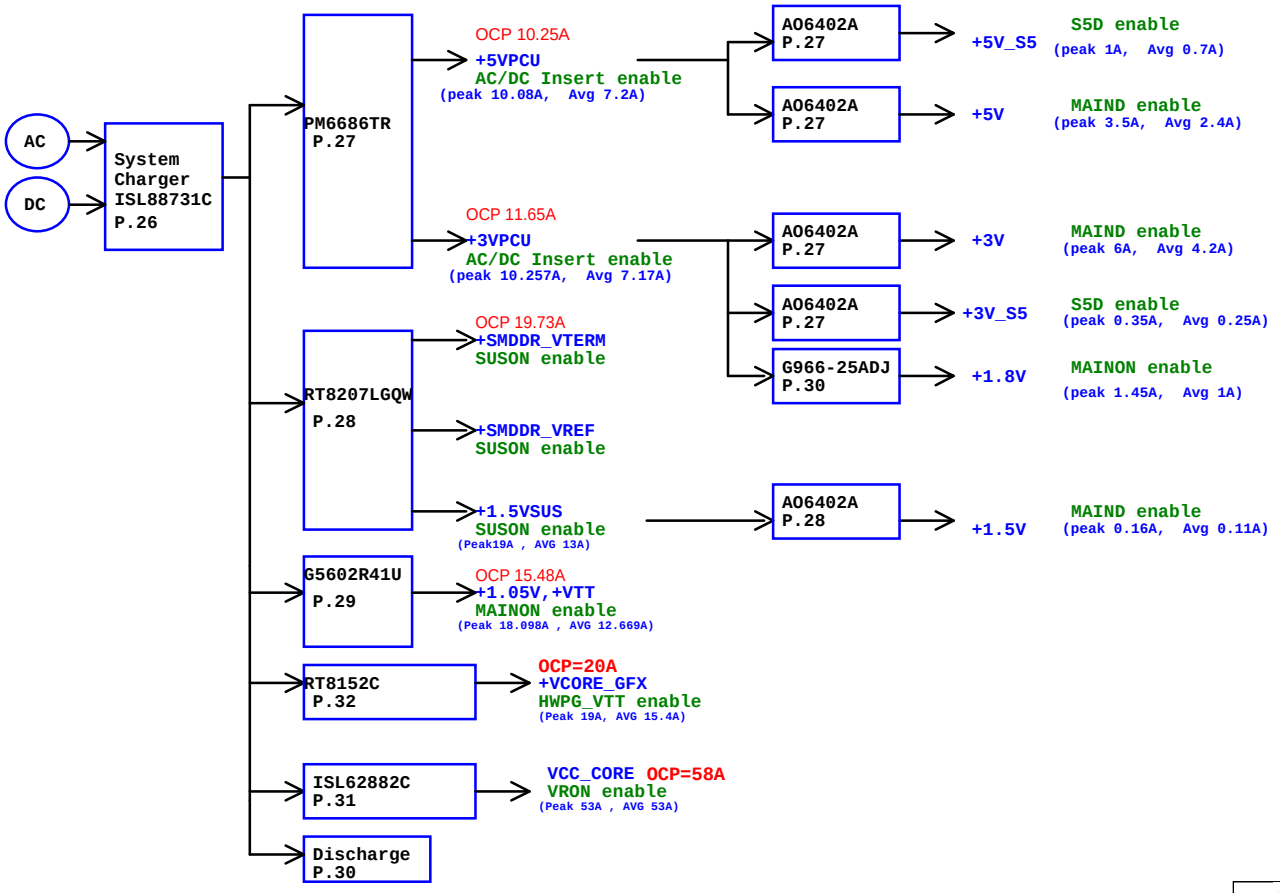


Quanta Computer Inc.

PROJECT : BU4

| Size | Document Number | Rev |
|---|---|---|
| | POWER TREE TABLE | 1A |

Date: Wednesday, December 29, 2010 Sheet 33 of 33